City of Republic

One & Two Family Residential

REVISION DATE: NOVEMBER 2015

Planning and Development Department
204 North Main Avenue, Republic, MO 65738
Phone: (417) 732-3150 Fax: (417) 732-3199
Inspection Hotline: (417) 732-3170 (24 hours a day/7 days a week)
Office hours are Monday through Friday 8:00am to 5:00pm

Based on the 2012 International Residential Code and the 2011 National Electrical Code

Mission Statement

The mission of the Planning and Development Department is to work with contractors, builders, and the public in order to give the consumer the opportunity to purchase a safe, quality home that meets the requirements of the building codes currently enforced by the City of Republic.

This guideline is intended to inform the contractor/builder of some of the most common code violations in regards to the construction of one and two-family housing and to answer some of the most frequently asked questions involving the building codes adopted by the City of Republic. It is not substitute for, nor does not attempt to address every item in the 2012 International Residential Code. It is YOUR responsibility to be familiar with the 2012 International Residential Code. A copy of the 2012 IRC is available for your review at the Planning and Development office and at City Hall. Staff can also give you contact information if you wish to order your own copy of the 2012 IRC.

It cannot be stressed enough that communication early in the planning process is your best defense against problems that might requiring demolition, rebuilding, rewiring, etc. If questions arise during the course of a project it is the responsibility of the contractor/builder to ask for a code interpretation.

Although inspections are performed on a scheduled basis, the Building Inspector is available for consultation anytime during regular office hours. Every effort will be made to return phone calls and set up appointments either on the job site or in the Planning Department office.

Wherever there are practical difficulties involved in carrying out the provisions of this code, the building official shall have the authority to grant modifications for individual cases, provided the building official shall first find that special individual reason makes the strict letter of this code impractical and the modification is in compliance with the intent and purpose of this code and that such modification does not lessen health, life and fire safety or structural requirements. The details of action granting modifications shall be recorded and entered in the files of the department of building safety. (R104.10)

Note: All Contractors and Sub-Contractors Are Required to Have a City of Republic Business License.

Note: 2012 International Residential Code and City Ordinance references are in blue font with appropriate code section shown in parenthesis (RXXX.X).

Note: Links to related documents are shown in a red underlined font.

Adopted Building Codes

- The building codes currently adopted by the City of Republic are as follows:
- The 2012 International Residential Code (IRC) with appendices A, B, C, D, E, G, H, J, K, N, O and Q
- The 2012 International Building Code (IBC) with appendices C, F, G, H, I and K
- The 2012 International Mechanical Code (IMC) with appendix A
- The 2012 International Plumbing Code (IPC) with appendices B, C, D and F
- The 2012 International Fuel Gas Code (IFGC) with appendices A, B, C and D
- The 2012 International Fire Code (IFC) with appendices A, B, C, D, E, F, G, H, I and J
- The 2009 ICC A117.1 Accessible and Usable Buildings and Facilities
- The 2011 National Electric Code (NEC)

Climatic and Geographic Design Criteria 2012 IRC Table R301.2(1)

- Ground Snow Load = 20 pounds per square foot
- Wind Design: Speed[d] = 90 miles per hour
- Wind Design: Topographic Effects[k] = No
- Seismic Design category[f] = B
- Subject to Damage from: Weathering[a] = Severe
- Subject to Damage from: Frost Line Depth[b] = 24 inches
- Subject to Damage from: Termite[c] = Moderate to Heavy
- Winter Design Temperature[e] = 9°F
- Ice Barrier Underlayment Required[h] = No
- Flood Hazards[g]: Date of Entry into NFIP = 1987
- Date of Flood Insurance Study = December 17, 2010
- Panel Numbers = 29077C0295E, 29077C0305E, 29077C0308E, 29077C0313E, 29077C0314E, 29077C0315E, 29077C0316E, 29077C0317E, 29077C0318E, 29077C0407E, 29077V0426E, 29077C0427E and 29077C0435E
- Air Freezing Index[l] = 714 degree days below 32°F
- Mean Annual Temperature[j] = 56.1°F

a. Weathering may require a higher strength concrete or grade of masonry than necessary to satisfy the structural requirements of this code. The weathering column shall be filled in with the weathering index (i.e., “negligible,” “moderate” or “severe”) for concrete as determined from the Weathering Probability Map [Figure R301.2(3)]. The grade of masonry units shall be determined from ASTM C 34, C 55, C 62, C 73, C 90, C 129, C 145, C 216 or C 652.

b. The frost line depth may require deeper footings than indicated in Figure R403.1(1). The jurisdiction shall fill in the frost line depth column with the minimum depth of footing below finish grade.

c. The jurisdiction shall fill in this part of the table to indicate the need for protection depending on whether there has been a history of local subterranean termite damage.

d. The jurisdiction shall fill in this part of the table with the wind speed from the basic wind speed map [Figure R301.2(4)A]. Wind exposure category shall be determined on a site-specific basis in accordance with Section R301.2.1.4.

e. The outdoor design dry-bulb temperature shall be selected from the columns of 971/2-percent values for winter from Appendix D of the International Plumbing Code. Deviations from the Appendix D temperatures shall be permitted to reflect local climates or local weather experience as determined by the building official.

f. The jurisdiction shall fill in this part of the table with the seismic design category determined from Section R301.2.2.1.

g. The jurisdiction shall fill in this part of the table with (a) the date of the jurisdiction's entry into the National Flood Insurance Program (date of adoption of the first code or ordinance for management of flood hazard areas), (b) the date(s) of the Flood Insurance Study and (c) the panel numbers and dates of all currently effective FIRMs and FBFMs or other flood hazard map adopted by the authority having jurisdiction, as amended.
h. In accordance with Sections R905.2.7.1, R905.4.3.1, R905.5.3.1, R905.6.3.1, R905.7.3.1 and R905.8.3.1, where there has been a history of local damage from the effects of ice damming, the jurisdiction shall fill in this part of the table with "YES." Otherwise, the jurisdiction shall fill in this part of the table with "NO."
i. The jurisdiction shall fill in this part of the table with the 100-year return period air freezing index (BF-days) from Figure R403.3(2) or from the 100-year (99 percent) value on the National Climatic Data Center data table "Air Freezing Index-USA Method (Base 32°F)" at www.ncdc.noaa.gov/oa/fpsf/AFI-pubreturn.pdf.
j. The jurisdiction shall fill in this part of the table with the mean annual temperature from the National Climatic Data Center data table "Air Freezing Index-USA Method (Base 32°F)" at www.ncdc.noaa.gov/oa/fpsf/AFI-pubreturn.pdf.
k. In accordance with Section R301.2.1.5, where there is local historical data documenting structural damage to buildings due to topographic wind speed-up effects, the jurisdiction shall fill in this part of the table with "YES." Otherwise, the jurisdiction shall indicate "NO" in this part of the table.

Building Permits

A building permit may be applied for with the Republic Planning and Development Department. Applications are available at 204 North Main Street, Republic, Missouri and on the city's website at: **http://www.republicmo.com/departments/planning/checklists-and-applications**. Applications will be processed within forty-eight (48) hours of submittal. Those received after twelve o'clock noon (12:00) will be considered received the following business day. Building permit fees are based on total square footage under roof. This includes garages, unfinished basements, covered porches, etc. To determine the current fees, please contact the Planning and Development office.

Site Plan Minimum Requirements

In addition to the Permit Application, the City requires an accurate floor plan and a site plan. Please see the last two pages of this packet for examples of acceptable and unacceptable site plan. The following information is required to be clearly stated on the site plans:

- Subdivision name, phase/addition number, lot number and street address
- The property lines and property dimensions
- Location and dimensions of front, side, and rear yard setbacks to the nearest drip edge of the structure
- The location, size, and shape of all structures proposed for construction
- Location and dimension of all parking areas and driveways
- Location of any easements, floodplains, or other pertinent legal features that cross the property
- Any other relevant information that may be required to determine conformance with applicable regulations, such as manholes, water meter pits, light poles, etc.

ALL SINGLE FAMILY RESIDENCES IN EXCESS OF 6,000 SQUARE FEET REQUIRE CONSTRUCTION PLANS PREPARED BY A QUALIFIED DESIGN PROFESSIONAL REGISTERED IN THE STATE OF MISSOURI. (CITY ORDINANCE SECTION 500.045 B)

If any part of the building is located in a flood plain, a flood plain development permit is required ***before*** any form of construction starts and before any building permit is issued. This includes excavation or filling. An elevation certificate is required when the building is complete in order to verify finished floor elevation and to issue a certificate of occupancy.

Contractor Responsibilities

- All houses shall have the street address and building permit number temporarily posted on the property during construction. Lot numbers will not suffice. Permanent address must be posted before a certificate of occupancy will be issued.
- The builder is responsible for hooking up the correct water line and electric meter to the correct building in multi family residences.
- Builders who need water during construction shall install a frost-free hydrant on the outside base of the water meter. No kind of apparatus is allowed inside meter box.
- Once the contractor has purchased a lot, he/she is responsible for the condition of all public improvements on that lot, i.e. sidewalks, water valves, manholes, storm water inlets, etc. No Certificate of Occupancy will be issued until damaged improvements are repaired. **(City Ordinance Section 500.040, D)**
- The contractor shall be responsible for cleaning excess mud, dirt, and debris from the street.
- The contractor shall be responsible for cleaning up trash and other debris that blows off property and onto residential development, public easements, or private property.

Building Setbacks

All setbacks are measured from the property line to the nearest drip edge of the building.

Inspections

Front setback	25 feet from the property line to the closest part of the building drip edge
Side setback - Interior Lot	6 feet from property line to the closest part of the building drip edge
Side setback - Corner Lot	25 Feet from property line on any side that abuts a street to the closest part of the building drip edge
Rear Setback	25 feet from the property line to the closest part of the building drip edge

The permit holder or contractor is responsible for initiating all inspections. To request an inspection, contact the Inspection hotline at (417) 732-3170. Inspection requests can be made on this automated line anytime day or night. The following minimum information is required:

- Permit Number
- Subdivision and jobsite address
- Type of inspection desired and requested time of inspection
- Contact information

Inspections Will Be Scheduled as Follows:

- Footing and Foundation Wall: If advanced notice is not possible, these inspections must be scheduled no later than 8:00 a.m. of the same day concrete will be poured.
- All other Inspections: If inspection request is received prior to 8 am, the inspection will be performed on the same business day. Any inspections received after 8 am will be performed during the next business day.

The building inspector will inform the contractor with the inspection results. This is typically done by leaving a copy of the inspection results at the job site. Scheduling a re-inspection is required if deficiencies are found during the initial inspection. Re-scheduling is the responsibility of the contractor. A re-inspection fee will be assessed on any deficient item found to be uncorrected during the re-inspection. This fee is required to be paid prior to requesting and scheduling the second re-inspection.

The Following Stages of Construction Will Require an Inspection:

- Footing Inspection: This inspection is required prior to placement of concrete and after the footings are dug, forms are set, all reinforcing steel is in place, and the electrical (UFER) grounding has been installed.
- Foundation Wall - Basement Wall: This inspection is required prior to placement of concrete after all forms are set; and reinforcing steel is in place.
- Sewer Service Inspection: This inspection is required for each sewer lateral installed and is performed by a representative of the Public Works Department. This inspection must be conducted prior to back filling. To schedule this inspection contact the Public Works Department at 732-7086.
- Water Service Inspection: This inspection is required for each water lateral installed from the meter pit into the house and is performed by a representative of the Public Works Department. This inspection must be conducted prior to back filling. To schedule this inspection contact the Public Works Department at 732-7086.
- Plumbing, Mechanical and Electrical Rough-in Inspections: This inspection is required prior to any concealment by the placement of insulation and drywall.
- Framing Inspection: This inspection is required once the framing, roof, exterior doors and windows, fire stopping, draft stopping and bracing are complete. This inspection must be conducted prior to any concealment by the placement of insulation and drywall. An insulation inspection must be scheduled prior to any drywall installation.
- Sheathing Inspection: This inspection is required once all of the exterior wall and roof sheathing, fire-stopping, draft-stopping, and bracing have been installed and prior to the installation of any house wrap material or seam sealing tape.
- Gas Inspection: This required inspection and pressure test is conducted at the rough-in stage before the furnace or appliances are installed. A gas inspection will be conducted, upon request, from Missouri Gas Energy (MGE) by calling 1-800-446-7409.
- Electric Service: Refer to **Electric Service Guideline** for additional details and requirements. This inspection is usually performed at the rough-in stage when all other rough-in inspections are performed and once the panel, combination meter base; secondary wiring, grounding electrode conductor and grounding electrode are installed. Passing services will be submitted to Empire District Electric for a meter set. The contractor will be informed of all services that fail inspection and will be responsible for scheduling follow up inspections in order to get a permanent meter set by Empire District Electric Company. Empire Electric will not set a permanent electric meter without notice from the City of Republic that the service has passed inspection.
- Backflow Device: A means of protection against backflow shall be provided in accordance with Sections P2902.3.1 through P2902.3.6. Backflow prevention applications shall conform to Table P2902.3, except as specifically stated in Sections P2902.4 through P2902.5.5.
- Insulation Inspection: This inspection is required once all of the rough in inspections have been completed and approved, and the insulation and house wrap is installed. This inspection must be conducted prior to the placement of drywall.
- Final Inspection: This inspection is required after all construction is complete and all landscaping and grading requirements have been met. In addition, all public improvements (sidewalks, water valves, etc.) serving the building lot must be undamaged **(City Ordinance Section 500.040, D)**. Imminent financial closings are not considered an emergency. A lack of planning by the builder will not be considered an emergency by the Building Inspector. Final inspections must be scheduled well in advanced of the financial closing in order to allow the builder time to correct any possible deficiencies and schedule a follow up inspection.
- Elevation documentation **(R109.1.6.1):** If located in a flood hazard area, the documentation of elevations required in Section R322.1.10 shall be submitted to the building official prior to the final inspection.

Certificates of Occupancy

Occupancy will not be permitted before a final inspection has been completed and passed, and a Certificate of Occupancy has been issued. Occupancy without a Certificate could result in the issuance of a citation by the building inspector and, with a guilty verdict, could result in a fine of up to $500 per day of unauthorized occupancy. Each day a building is occupied without a Certificate of Occupancy is considered a separate offense. In addition, a Certificate of Occupancy will not be issued unless all public improvements (sidewalks, water valves, etc.) serving the building lot are undamaged **(City Ordinance Section 500.040)**.

Temporary Certificates of Occupancy

A Temporary Certificate of Occupancy can only be issued after a final inspection has been completed and passed. The 2012 International Residential Code allows for the issuance of a Temporary Certificate of Occupancy, at the discretion of the Building Inspector, only if all safety considerations have been met to the satisfaction of the building code. City Ordinance Section 405.790 limits the issuance of a Temporary Certificate of Occupancy, due to incomplete landscaping, from November 1st to March 1st.

Safety Considerations

Smoke Detectors

Location (R314.3): Smoke alarms shall be installed in the following locations:

- In each sleeping room.
- Outside each separate sleeping area in the immediate vicinity of the bedrooms.
- On each additional story of the dwelling, including basements and habitable attics but not including crawl spaces and uninhabitable attics. In dwellings or dwelling units with split levels and without an intervening door between the adjacent levels, a smoke alarm installed on the upper level shall suffice for the adjacent lower level provided that the lower level is less than one full story below the upper level.

Interconnection (R314.5): Where more than one smoke alarm is required to be installed within an individual dwelling unit in accordance with Section R314.3, the alarm devices shall be interconnected in such a manner that the actuation of one alarm will activate all of the alarms in the individual unit. Physical interconnection of smoke alarms shall not be required where listed wireless alarms are installed and all alarms sound upon activation of one alarm..

Power source (R314.4): Smoke alarms shall receive their primary power from the building wiring when such wiring is served from a commercial source, and when primary power is interrupted, shall receive power from a battery. Wiring shall be permanent and without a disconnecting switch other than those required for overcurrent protection.

Carbon Monoxide Alarms

Carbon monoxide alarms (R315.1): For new construction, an approved carbon monoxide alarm shall be installed outside of each separate sleeping area in the immediate vicinity of the bedrooms in dwelling units within which fuel-fired appliances are installed and in dwelling units that have attached garages.

Automatic Fire Sprinkler Systems (R313)

Based on Missouri Revised Statutes No. 67.281, *"A builder of one- or two- family dwellings or townhouses shall offer to any purchaser on or before the time of entering into the purchase contract the option, at the purchaser's cost, to install or equip fire sprinklers in the dwelling or townhouse. Notwithstanding any other provision of law to the contrary, no purchaser of such a one- or two- family dwelling or townhouse shall be denied the right to choose or decline to install a fire sprinkler system in such dwelling or townhouse being purchased by any code, ordinance, rule, regulation, order, or resolution by any county or other political subdivision."* A copy of the signed waiver shall be submitted to the City of Republic for incorporation into the building permit file. A certificate of occupancy will not be issued until a copy of the waiver form is submitted to the City.

Foundations and Footings

The minimum dimensions for footings are based on loading and an assumed allowable soil pressure of 2,000 pounds per square foot. Footing widths or the depth of footings below natural grade may have to be increased if the supporting soil is of a type not having an allowable bearing pressure of at least 2,000 pounds per square foot.

Depth: Footings are to be poured on a solid bearing surface. The bearing surface shall be a minimum of 24 inches below finished grade.

Table R403.1—Minimum Width of Concrete, Precaast or Masonry Footing (inches[a])				
	Load Bearing of Soil (psf)			
	1500	2000	3000	≥4000
Conventional Light Frame Construction				
1 Story	12	12	12	12
2 Story	15	12	12	12
3 Story	23	17	12	12
4-inch Brick Veneer Over Light Frame or 8-inch Hollow Concrete Masonry				
1 Story	12	12	12	12
2 Story	21	16	12	12
3 Story	32	24	16	12
8-inch Solid or Fully Grouted Masonry				
1 Story	16	12	12	12
2 Story	29	21	14	12
3 Story	42	32	21	16

a. Where minimum footing width is 12 inches, use of a single wythe of solid or fully grouted 12-inch nominal concrete masonry units is permitted

General (R403.1): All exterior walls shall be supported on continuous solid or fully grouted masonry or concrete footings, crushed stone footings, wood foundations, or other approved structural systems which shall be of sufficient design to accommodate all loads according to Section R301 and to transmit the resulting loads to the soil within the limitations as determined from the character of the soil. Footings shall be supported on undisturbed natural soils or engineered fill. Concrete footing shall be designed and constructed in accordance with the provisions of Section R403 or in accordance with ACI 332.

Minimum size (R403.1.1): Minimum sizes for concrete and masonry footings shall be as set forth in Table R403.1 and Figure R403.1(1). The footing width, W, shall be based on the load-bearing value of the soil in accordance with Table R401.4.1. Spread footings shall be at least 6 inches in thickness, T. Footing projections, P, shall be at least 2 inches and shall not exceed the thickness of the footing. The size of footings supporting piers and columns shall be based on the tributary load and allowable soil pressure in accordance with Table R401.4.1. Footings for wood foundations shall be in accordance with the details set forth in Section R403.2, and Figures R403.1(2) and R403.1(3).

Slope (R403.1.5): The top surface of footings shall be level. The bottom surface of footings shall not have a slope exceeding one unit vertical in 10 units horizontal (10-percent slope). Footings shall be stepped where it is necessary to change the elevation of the top surface of the footings or where the slope of the bottom surface of the footings will exceed one unit vertical in ten units horizontal (10-percent slope).

Horizontal: A minimum of 2 strands of ½ rebar (#4) placed three (3) inches from the side and located in the bottom third of the footing. Joints are to be lapped and tied a minimum of fifteen (15) inches. Rebar must be supported on steel chairs or wickets designed for that purpose.

Vertical: A minimum of one (1) ½ -inch (#4) rebar every 6 feet, extending vertically from the footing and terminating within 3-inches of the top of the foundation wall. Vertical steel may be placed in footings before the concrete sets or drilled in place before the foundation wall forms are placed.

Exception: Vertical steel is not required in foundation walls less than 24 inches high.

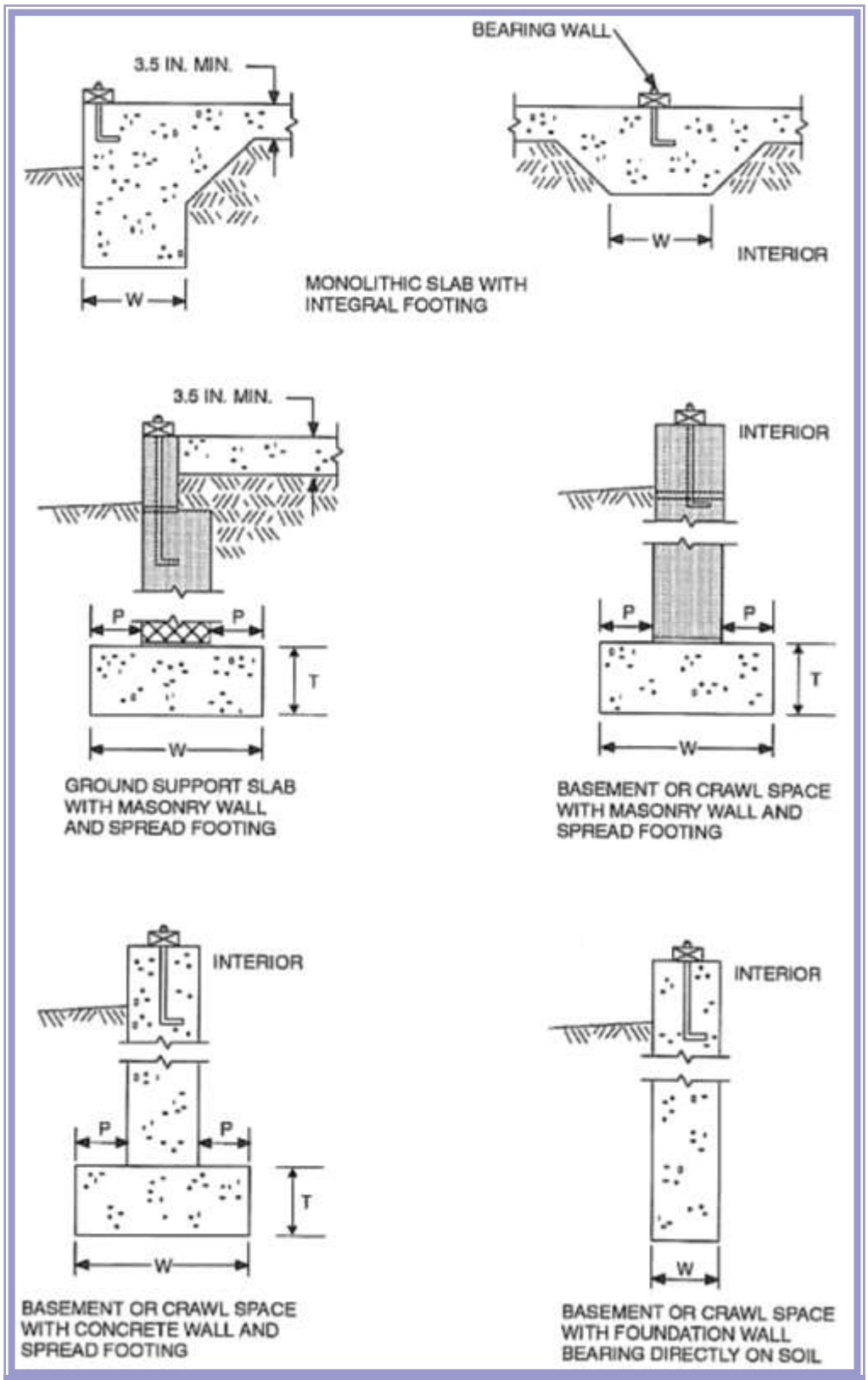

Figure R403.1(1) - Concrete and Masonry Foundation Details

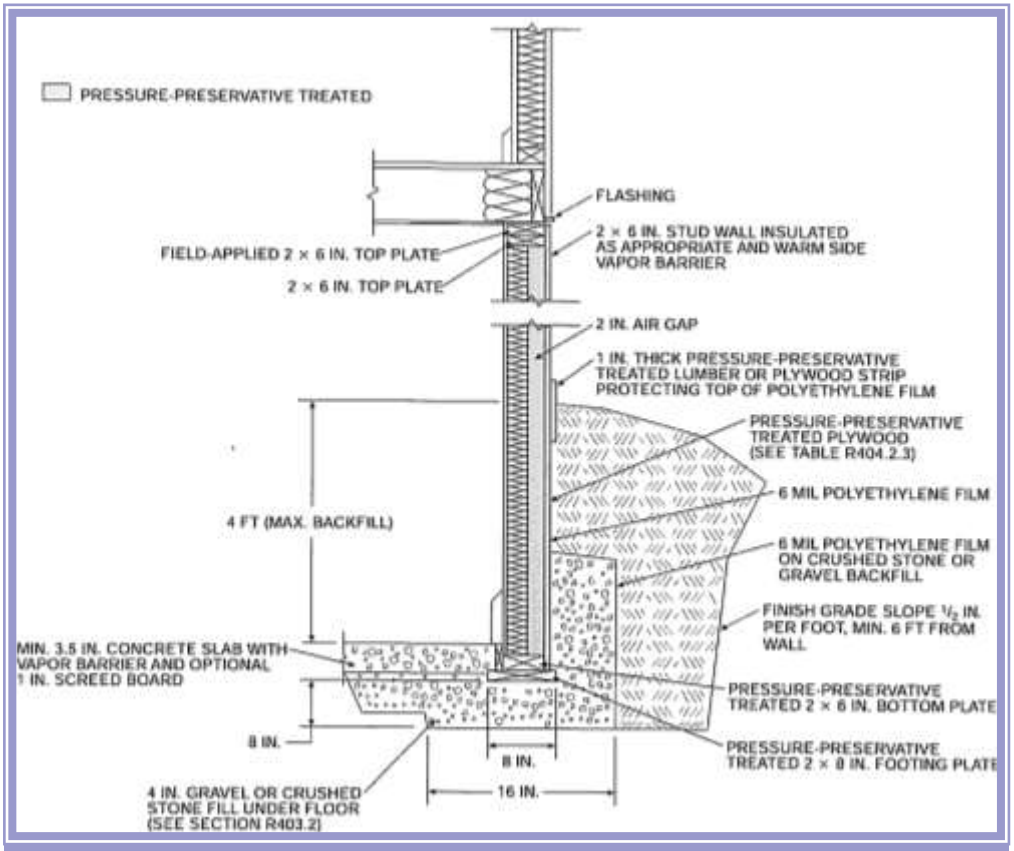

Figure R403.1(2) - Permanent Wood Foundation Basement Wall Section

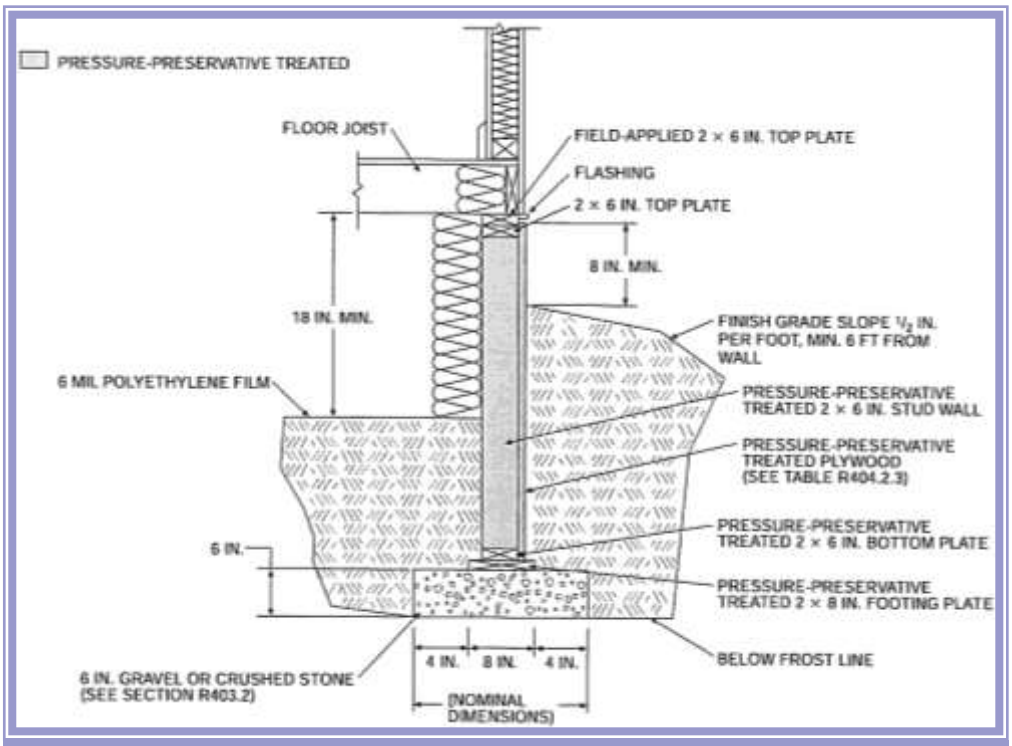

Figure R403.1(3) - Permanent Wood Foundation Crawl Space Section

Miscellaneous:

- Concrete can only be placed on frost-free, unfrozen surfaces devoid of standing water, loose debris, large rocks, or biodegradable material.
- Concrete footing shall be protected from freezing during placement and for a period of not less than three (3) days thereafter. Protection must be in the form of insulating blankets or other approved insulating device. Straw or hay is not considered an acceptable insulator.
- Concrete shall have a compressive strength of no less than 2,500 pounds per square inch at 28 days. **(Table R402.2)**
- Load bearing value of the soil in footing trenches shall be a minimum of 2,000 pounds per square foot. **(Table R401.4.1)**

Foundation and Retaining Walls

Height Above Finished Grade (R404.1.6): Concrete and masonry foundation walls shall extend above the finished grade adjacent to the foundation at all points a minimum of 4 inches where masonry veneer is used and a minimum of 6 inches elsewhere.

Foundation Wall Thickness Based on Walls Supported (R404.1.5): The thickness of masonry or concrete foundation walls shall not be less than that required by Section R404.1.5.1 or R404.1.5.2, respectively.

Masonry Wall Thickness (R404.1.5.1): Masonry foundation walls shall not be less than the thickness of the wall supported, except that masonry foundation walls of at least 8-inch nominal thickness shall be permitted under brick veneered frame walls and under 10-inch-wide cavity walls where the total height of the wall supported, including gables, is not more than 20 feet, provided the requirements of Section R404.1.1 are met.

Concrete Wall Thickness (R404.1.5.2): The thickness of concrete foundation walls shall be equal to or greater than the thickness of the wall in the story above. Concrete foundation walls with corbels, brackets or other projections built into the wall for support of masonry veneer or other purposes are not within the scope of the tables in this section. Where a concrete foundation wall is reduced in thickness to provide a shelf for the support of masonry veneer, the reduced thickness shall be equal to or greater than the thickness of the wall in the story above. Vertical reinforcement for the foundation wall shall be based on Table R404.1.2(8) and located in the wall as required by Section R404.1.2.3.7.2 where that table is used. Vertical reinforcement shall be based on the thickness of the thinner portion of the wall.

Exception: Where the height of the reduced thickness portion measured to the underside of the floor assembly or sill plate above is less than or equal to 24 inches and the reduction in thickness does not exceed 4 inches, the vertical reinforcement is permitted to be based on the thicker portion of the wall.

- Foundation wall height shall be a minimum of one (1) foot above the top of the street curb on the lowest side of the lot.
- Foundation walls four (4) feet or more in height shall contain horizontal steel.
- Foundation walls two (2) feet or more in height shall have a minimum of one (1) ½ -inch (#4) rebar every 6 feet, extending vertically from inside the footing and terminating within 3-inches of the top of the foundation wall. Vertical steel may be placed in footings before the concrete sets or drilled in place before the foundation wall forms are placed.
- Anchor bolts shall be spaced a maximum of 6 feet on center and within 6 inches of the ends of plates, with a minimum of two anchor bolts per plate section.
- Foundation walls of habitable rooms, located below grade shall be water proofed.

Concrete or masonry foundations (R405.1): Drains shall be provided around all concrete or masonry foundations that retain earth and enclose habitable or usable spaces located below grade. Drainage tiles, gravel or crushed stone drains, perforated pipe or other approved systems or materials shall be installed at or below the area to be protected and shall discharge by gravity or mechanical means into an approved drainage system. Gravel or crushed stone drains shall extend at least 1 foot beyond the outside edge of the footing and 6 inches above the top of the footing and be covered with an approved filter membrane material. The top of open joints of drain tiles shall be protected with strips of building paper. Perforated drains shall be surrounded with an approved filter membrane or the filter membrane shall cover the washed gravel or crushed rock covering the drain. Drainage tiles or perforated pipe shall be placed on a minimum of 2 inches of washed gravel or crushed rock at least one sieve size larger than the tile joint opening or perforation and covered with not less than 6 inches of the same material.

- Drain lines shall discharge by natural means.
- All bottom sill plates in contact with concrete shall be of treated wood or wood naturally resistant to decay.

Piers and Columns

Piers and columns are vertical members usually made of concrete, brick, block, steel, or wood and are used to support the floor system. Piers and columns may be used to support the complete structure or they may be used in conjunction with the foundation wall and provide intermediate support between girders and beams.

The unsupported height of masonry piers shall not exceed ten times their least dimension. When structural clay tile or hollow concrete masonry units are used for isolated piers to support beams and girders, the cellular spaces shall be filled solidly with concrete or Type M or S mortar, except that unfilled hollow piers may be used if their unsupported height is not more than four times their least dimension.

Hollow piers shall be capped with 4 inches of solid masonry or concrete or shall have cavities of the top course filled with concrete or grout or other approved methods.

Pads for poured concrete piers shall be a minimum of 8 inches thick.

Pier columns shall be a minimum of eight (8) inches in width.

Concrete columns shall be doweled to the pier with ½ inch rebar.

Columns in basements shall be of treated wood or steel posts not less than three (3) inches in diameter.

Shims for floor joist or girders shall be of hardwood or steel plates or other wood which is not easily compressible, tight grained to resist compression, and rot and pest resistant. Shim width shall not be less than girder width, i.e. a 4½-inch girder requires a 4½-inch x 4½-inch shim.

Brick

Brick or masonry veneers must be supported by the foundation and footings. The mortar shall be sufficiently plastic and units shall be placed with sufficient pressure to extrude mortar from the joint and produce a tight joint. Deep furrowing of bed joints that produces voids shall not be permitted. Any units disturbed to the extent that the initial bond is broken after initial placement shall be removed and re-laid in fresh mortar. Surfaces to be in contact with mortar shall be clean and free of deleterious materials.

The brick ledge can be formed in the foundation wall or by concrete units bearing on the footing; head and bed joints are required.

Water-resistive barrier (R703.2): One layer of No. 15 asphalt felt, free from holes and breaks, complying with ASTM D 226 for Type 1 felt or other approved water-resistive barrier shall be applied over studs or sheathing of all exterior walls. Such felt or material shall be applied horizontally, with the upper layer lapped over the lower layer not less than 2 inches. Where joints occur, felt shall be lapped not less than 6 inches. The felt or other approved material shall be continuous to the top of walls and terminated at penetrations and building appendages in a manner to meet the requirements of the exterior wall envelope as described in Section R703.1.

Lintels (R703.7.3): Masonry veneer shall not support any vertical load other than the dead load of the veneer above. Veneer above openings shall be supported on lintels of noncombustible materials. The lintels shall have a length of bearing not less than 4 inches. Steel lintels shall be shop coated with a rust-inhibitive paint, except for lintels made of corrosion-resistant steel or steel treated with coatings to provide corrosion resistance. Construction of openings shall comply with either Section R703.7.3.1 or 703.7.3.2.

Allowable span (R703.7.3.1): The allowable span shall not exceed the values set forth in Table R703.7.3.1.

Table R703.7.3.1—Allowable Spans for Lintels Supporting Masonry Veneer[a, b, c, d]				
Size of Steel Angle[a, c, d] (inches)	No Story Above	One Story Above	Two Stories Above	Number of 1/2 inch or Equivalent Reinforcing Bars in Reinforced Lintel[b, d]
3 x 3 x 1/4	6'-0"	4'-6"	3'-0"	1
4 x 3 x 1/4	8'-0"	6'-0"	4'-6"	1
5 x 3-1/2 x 5/16	10'-0"	8'-0"	6'-0"	2
6 x 3-1/2 x 5/16	14'-0"	9'-6"	7'-0"	2
2 each 6 x 3-1/2 x 5/16	20'-0"	12'-0"	9'-6"	4

a. Long leg of the angle shall be placed in a vertical position.

b. Depth of reinforced lintels shall not be less than 8 inches and all cells of hollow masonry lintels shall be grouted solid. Reinforcing bars shall extend not less than 8 inches into the support.

c. Steel members indicated are adequate typical examples; other steel members meeting structural design requirements may be used.

d. Either steel angle or reinforced lintel shall span opening.

Maximum span (R703.7.3.2): The allowable span shall not exceed 18 feet 3 inches and shall be constructed to comply with Figure R703.7.3.2 and the following:

1. Provide a minimum length of 18 inches of masonry veneer on each side of opening as shown in Figure R703.7.3.2.
2. Provide a minimum 5-inch by 3 ½-inch by 5/16-inch steel angle above the opening and shore for a minimum of 7 days after installation.
3. Provide double-wire joint reinforcement extending 12 inches beyond each side of the opening. Lap splices of joint reinforcement a minimum of 12 inches. Comply with one of the following:
   a. Double-wire joint reinforcement shall be 3/16-inch diameter and shall be placed in the first two bed joints above the opening.
   b. Double-wire joint reinforcement shall be 9 gauge and shall be placed in the first three bed joints above the opening.
4. Provide the height of masonry veneer above opening, in accordance with Table R703.7.3.2.

Table R703.7.3.2—Height of Masonry Veneer Above Opening	
Minimum Height of Masonry Veneer Above Opening (inch)	Maximum Height of Masonry Veneer Above Opening (feet)
13	<5
24	5 to <12
60	12 to height above support allowed by Section R703.7

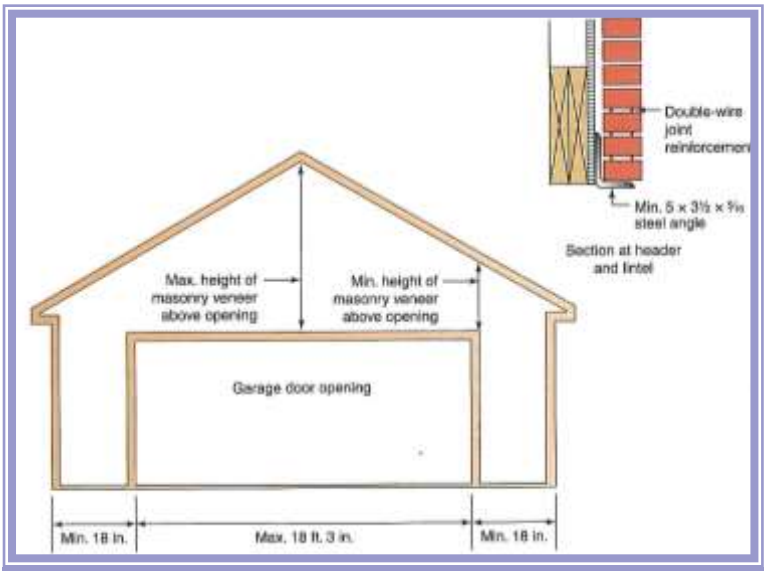

Figure R703.7.3.2—Masonry Veneer Opening

Anchorage (R703.7.4): Masonry veneer shall be anchored to the supporting wall studs with corrosion-resistant metal ties embedded in mortar or grout and extending into the veneer a minimum of 1 ½ inches, with not less than 5/8 inch mortar or grout cover to outside face. Masonry veneer shall conform to Table R703.7.4.

Table R703.7.4—Tie Attachment and Air Space requirements

Backing and Tie	Minimum Tie	Minimum Tie Fastener [a]	Air Space	
Wood stud backing with corrugated sheet metal	22 US Gauge x $^{7}/_{8}$ inch wide	8d Common nail [b]	Nominal 1 inch between sheathing and veneer	
Wood stud backing with metal strand wire	W1.7 with hook embedded in mortar joint	8d common nail [b]	Minimum nominal 1 inch between sheathing and veneer	Maximum 4 ½ inch between backing and veneer
Cold formed steel stud backing with adjustable metal strand wire	W1.7 with hook embedded in mortar joint	Number 10 screw extending through the steel framing a minimum of three exposed threads	Minimum nominal 1 inch between sheathing and veneer	Maximum 4 ½ inch between backing and veneer

a. In Seismic Design Category D0, D1 or D2, the minimum tie fastener shall be an 8d ring-shank nail (21/2 in. × 0.131 in.) or a No. 10 screw extending through the steel framing a minimum of three exposed threads.

b. All fasteners shall have rust-inhibitive coating suitable for the installation in which they are being used, or be manufactured from material not susceptible to corrosion.

Size and spacing (R703.7.4.1): Veneer ties, if strand wire, shall not be less in thickness than No. 9 U.S. gage wire and shall have a hook embedded in the mortar joint, or if sheet metal, shall be not less than No. 22 U.S. gage by 7/8 inch corrugated. Each tie shall support not more than 2.67 square feet of wall area and shall be spaced not more than 32 inches on center horizontally and 24 inches on center vertically.

Veneer ties around wall openings (R703.7.4.1.1): Additional metal ties shall be provided around all wall openings greater than 16 inches in either dimension. Metal ties around the perimeter of openings shall be spaced not more than 3 feet on center and placed within 12 inches of the wall opening.

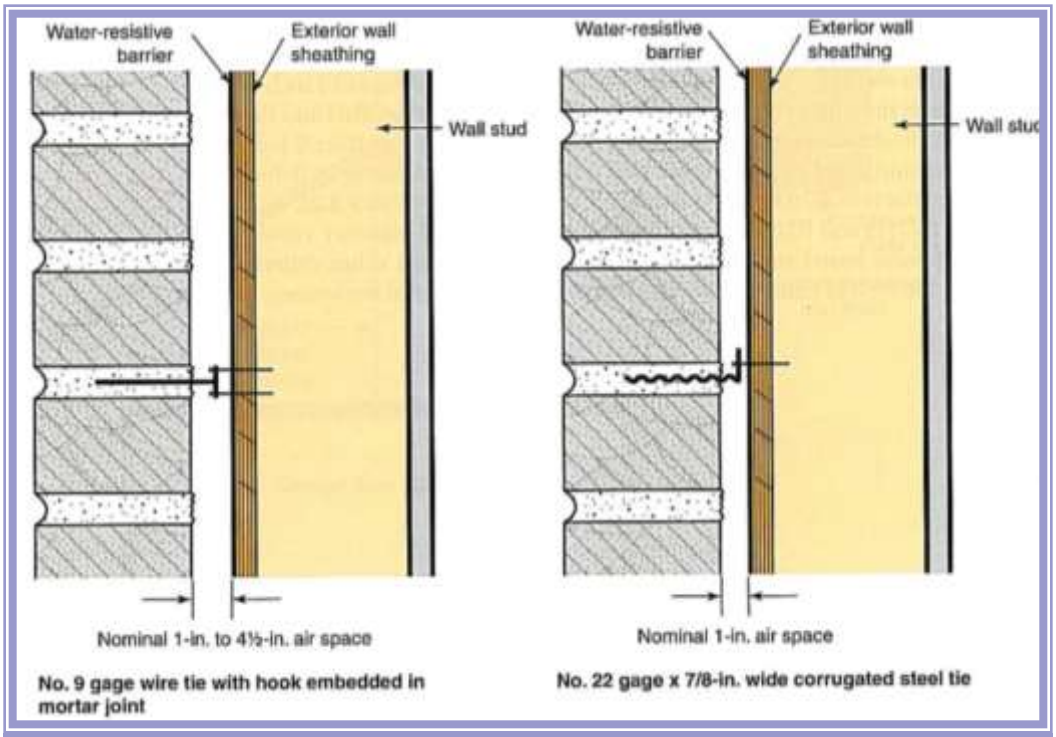

Masonry Veneer Wall Anchorage and Air Space

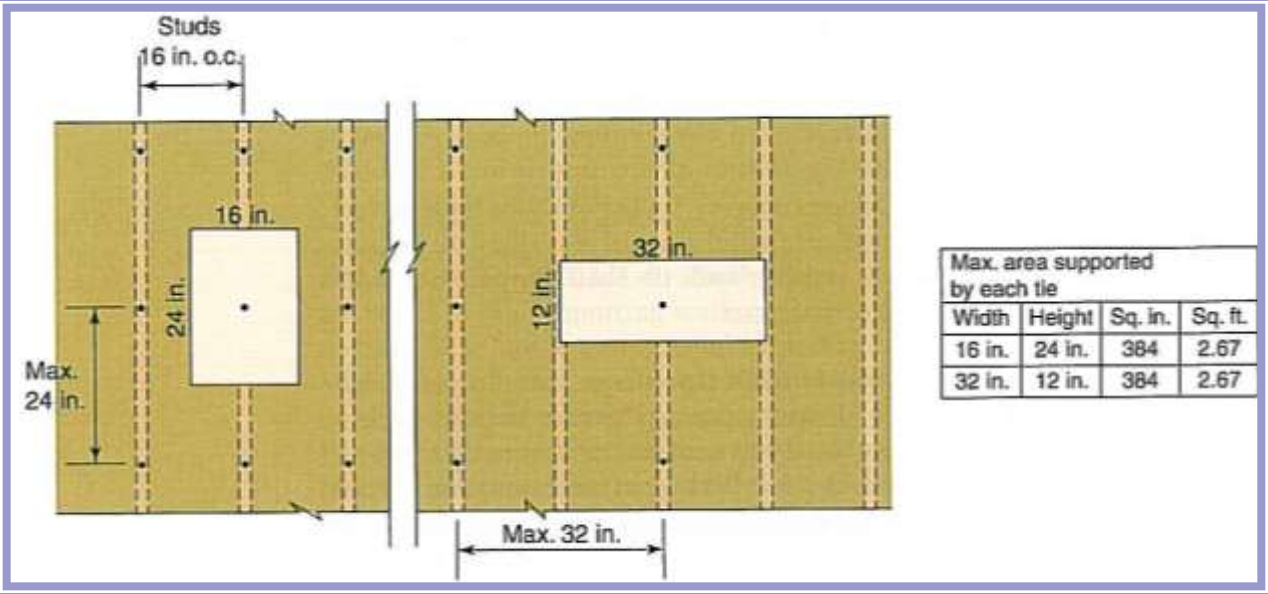

Max. area supported by each tie

Width	Height	Sq. in.	Sq. ft.
16 in.	24 in.	384	2.67
32 in.	12 in.	384	2.67

Veneer Tie Spacing for all Buildings in SDC A and B and Detached Dwellings in SDC C

Grout fill (R703.7.4.2): As an alternative to the air space required by Table R703.7.4, grout shall be permitted to fill the air space. When the air space is filled with grout, a water-resistive barrier is required over studs or sheathing. When filling the air space, replacing the sheathing and water-resistive barrier with a wire mesh and approved water-resistive barrier or an approved water-resistive barrier-backed reinforcement attached directly to the studs is permitted.

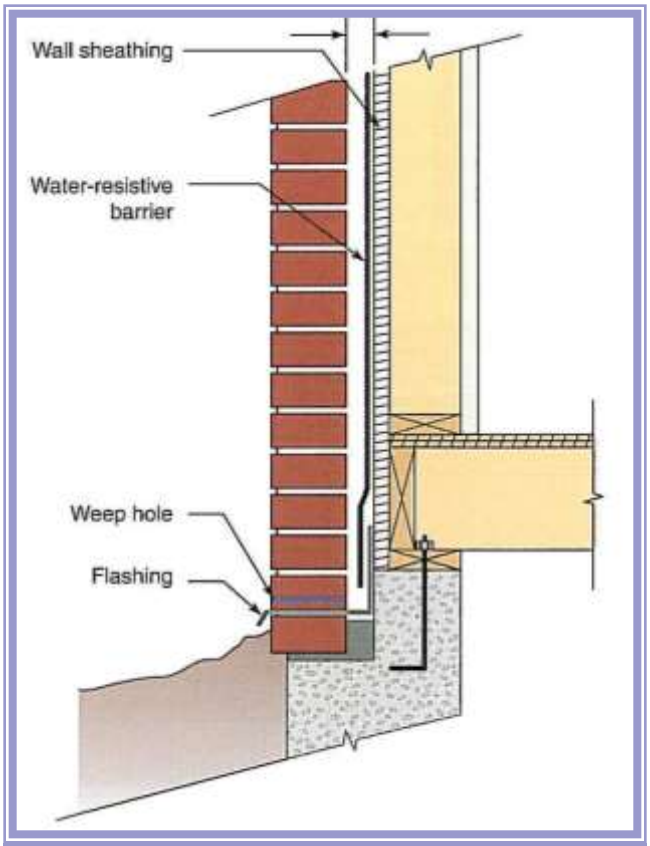

Mortar is Not Permitted to Fill the Air Space Behind Anchored Masonry Veneer

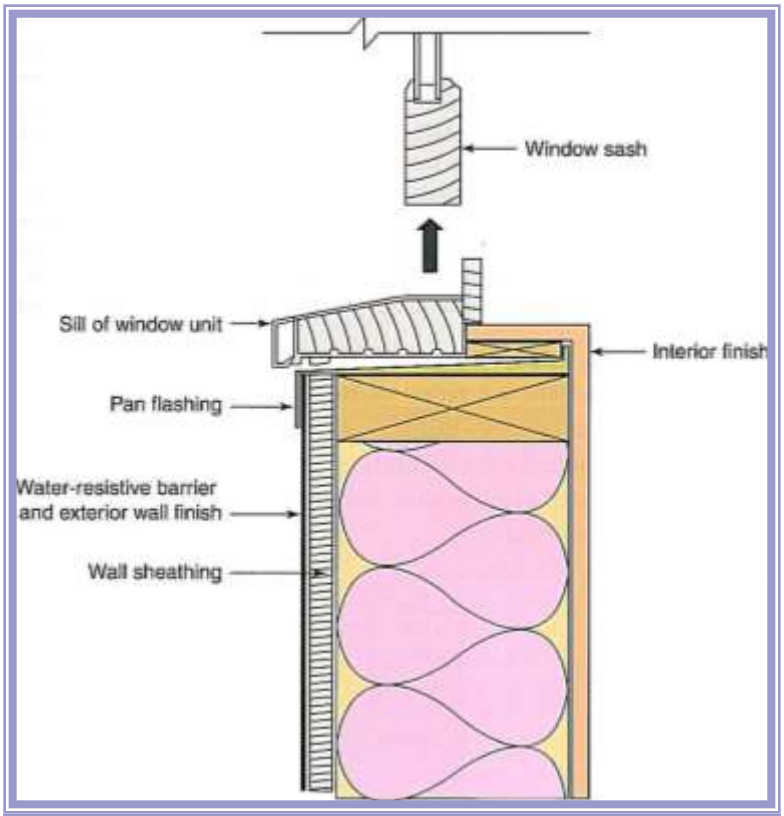

Pan Flashing

Flashing (R703.7.5): Flashing shall be located beneath the first course of masonry above finished ground level above the foundation wall or slab and at other points of support, including structural floors, shelf angles and lintels when masonry veneers are designed in accordance with Section R703.7. See Section R703.8 for additional requirements.

Weep holes (R703.7.6): Weep holes shall be provided in the outside wythe of masonry walls at a maximum spacing of 33 inches on center. Weep holes shall not be less than 3/16 inch in diameter. Weep holes shall be located immediately above the flashing.

Flashing (R703.8): Approved corrosion-resistant flashing shall be applied shingle-fashion in a manner to prevent entry of water into the wall cavity or penetration of water to the building structural framing components. Self-adhered membranes used as flashing shall comply with AAMA 711. The flashing shall extend to the surface of the exterior wall finish. Approved corrosion-resistant flashings shall be installed at all of the following locations:

1. Exterior window and door openings. Flashing at exterior window and door openings shall extend to the surface of the exterior wall finish or to the water-resistive barrier for subsequent drainage. Flashing at exterior window and door openings shall be installed in accordance with one or more of the following:
   a. The fenestration manufacturer's installation and flashing instructions, or for applications not addressed in the fenestration manufacturer's instructions, in accordance with the flashing manufacturer's instructions. Where flashing instructions or details are not provided, pan flashing shall be installed at the sill of exterior window and door openings. Pan flashing shall be sealed or sloped in such a manner as to direct water to the surface of the exterior wall finish or to the water-resistive barrier for subsequent drainage. Openings using pan flashing shall also incorporate flashing or protection at the head and sides.
   b. In accordance with the flashing design or method of a registered design professional.
   c. In accordance with other approved methods.
2. At the intersection of chimneys or other masonry construction with frame or stucco walls, with projecting lips on both sides under stucco copings.
3. Under and at the ends of masonry, wood or metal copings and sills.
4. Continuously above all projecting wood trim.
5. Where exterior porches, decks or stairs attach to a wall or floor assembly of wood-frame construction.
6. At wall and roof intersections.
7. At built-in gutters.

Drainage & Exterior (Section R405)

Drainage (R401.3): Surface drainage shall be diverted to a storm sewer conveyance or other approved point of collection that does not create a hazard. Lots shall be graded to drain surface water away from foundation walls. The grade shall fall a minimum of 6 inches within the first 10 feet.

Exception: Where lot lines, walls, slopes or other physical barriers prohibit 6 inches of fall within 10 feet, drains or swales shall be constructed to ensure drainage away from the structure. Impervious surfaces within 10 feet of the building foundation shall be sloped a minimum of 2 percent away from the building.

Concrete or masonry foundations (R405.1): Drains shall be provided around all concrete or masonry foundations that retain earth and enclose habitable or usable spaces located below grade. Drainage tiles, gravel or crushed stone drains, perforated pipe or other approved systems or materials shall be installed at or below the area to be protected and shall discharge by gravity or mechanical means into an approved drainage system. Gravel or crushed stone drains shall extend at least 1 foot beyond the outside edge of the footing and 6 inches above the top of the footing and be covered with an approved filter membrane material. The top of open joints of drain tiles shall be protected with strips of building paper. Perforated drains shall be surrounded with an approved filter membrane or the filter membrane shall cover the washed gravel or crushed rock covering the drain. Drainage tiles or perforated pipe shall be placed on a minimum of 2 inches of washed gravel or crushed rock at least one sieve size larger than the tile joint opening or perforation and covered with not less than 6 inches of the same material.

Exception: A drainage system is not required when the foundation is installed on well-drained ground or sand gravel mixture soils according to the Unified Soil Classification System, Group I Soils, as detailed in Table R405.1.

Residential lots shall have a minimum of one (1) tree at least six (6) feet tall. Yards will be seeded and mulched. **(City Ordinance Section 405.090 and Section 410.710(A)(2)**.

Stairways (2012 IRC Section R311.7)

Refer to **Stairways Guidelines** and the **IRC Visual Guideline for Stairways** for additional details and requirements.

Width (R311.7.1): Stairways shall not be less than 36 inches in clear width at all points above the permitted handrail height and below the required headroom height. Handrails shall not project more than 4 ½ inches on either side of the stairway and the minimum clear width of the stairway at and below the handrail height, including treads and landings, shall not be less than 31 ½ inches where a handrail is installed on one side and 27 inches where handrails are provided on both sides.

Headroom (R311.7.2): The minimum headroom in all parts of the stairway shall not be less than 6 feet—8 inches measured vertically from the sloped plane adjoining the tread nosing or from the floor surface of the landing or platform.

Stair Treads and Risers (R311.7.5.1): The maximum riser height shall be 7 ¾ inches. The riser shall be measured vertically between leading edges of the adjacent treads. The greatest riser height within any flight of stairs shall not exceed the smallest by more than $^{3}/_{8}$ inch. Risers shall be vertical or sloped from the underside of the nosing of the tread above at an angle not more than 30 degrees from the vertical. Open risers are permitted provided that the opening between treads does not permit the passage of a 4-inch-diameter sphere.

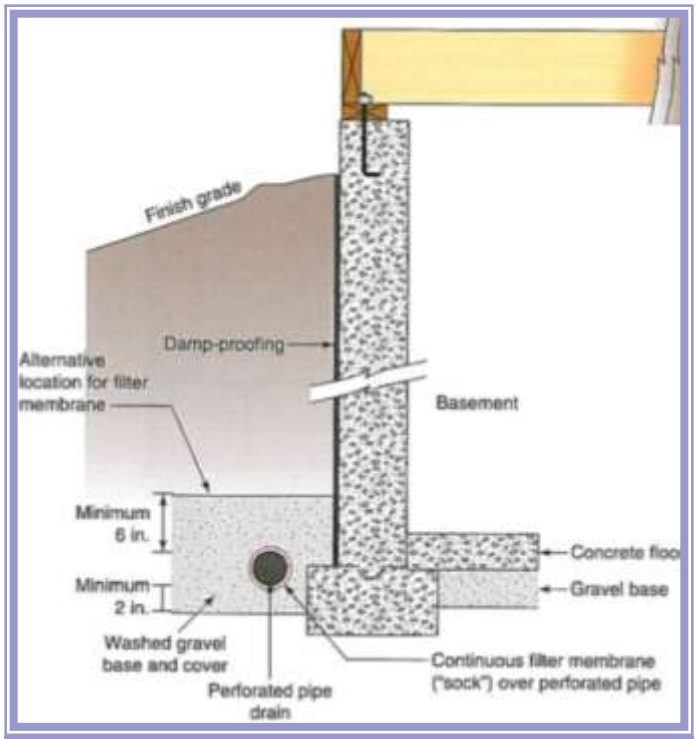

Filter Membrane Required for Perforated Pipe Foundation Drain

Tread Depth (R311.7.5.2): The minimum tread depth shall be 10 inches. The tread depth shall be measured horizontally between the vertical planes of the foremost projection of adjacent treads and at a right angle to the tread's leading edge. The greatest tread depth within any flight of stairs shall not exceed the smallest by more than $^{3}/_{8}$ inch. Winder treads shall have a minimum tread depth of 10 inches measured between the vertical planes of the foremost projection of adjacent treads at the intersections with the walk line. Winder treads shall have a minimum tread depth of 6 inches at any point within the clear width of the stair. Within any flight of stairs, the largest winder tread depth at the walk line shall not exceed the smallest winder tread by more than $^{3}/_{8}$ inch. Consistently shaped winders at the walk line shall be allowed within the same flight of stairs as rectangular treads and do not have to be within $^{3}/_{8}$ inch of the rectangular tread depth.

Profile (R311.7.5.3): The radius of curvature at the nosing shall be no greater than $^{9}/_{16}$ inch. A nosing not less than ¾ inch, but not more than 1 ¼ inches shall be provided on stairways with solid risers. The greatest nosing projection shall not exceed the smallest nosing projection by more than $^{3}/_{8}$ inch between two stories, including the nosing at the level of floors and landings. Beveling of nosings shall not exceed ½ inch.

Exception: A nosing is not required where the tread depth is a minimum of 11 inches.

Walking Surface (R311.7.7): The walking surface of treads and landings of stairways shall be sloped no steeper than one unit vertical in 48 inches horizontal (2-percent slope).

Landings for Stairways

Stairway Landings (R311.7.6): There shall be a floor or landing at the top and bottom of each stairway. The minimum width perpendicular to the direction of travel shall be no less than the width of the flight served. Landings of shapes other than square or rectangular shall be permitted provided the depth at the walk line and the total area is not less than that of a quarter circle with a radius equal to the required landing width. Where the stairway has a straight run, the minimum depth in the direction of travel shall be not less than 36 inches.

Exception: A floor or landing is not required at the top of an interior flight of stairs, including stairs in an enclosed garage, provided a door does not swing over the stairs.

Landings at exterior doors (R311.3.1): Landings or finished floors at the required egress door shall not be more than 1 ½ inches lower than the top of the threshold.

Exception: The landing or floor on the exterior side shall not be more than 7 ¾ inches below the top of the threshold provided the door does not swing over the landing or floor.

Where exterior landings or floors serving the required egress door are not at grade, they shall be provided with access to grade by means of a ramp in accordance with Section R311.8 or a stairway in accordance with Section R311.7.

Floor elevations for other exterior doors (R311.3.2): Doors other than the required egress door shall be provided with landings or floors not more than 7 ¾ inches below the top of the threshold.

Exception: A landing is not required where a stairway of two or fewer risers is located on the exterior side of the door, provided the door does not swing over the stairway.

Stairway illumination (R303.7): All interior and exterior stairways shall be provided with a means to illuminate the stairs, including the landings and treads. Interior stairways shall be provided with an artificial light source located in the immediate vicinity of each landing of the stairway. For interior stairs the artificial light sources shall be capable of illuminating treads and landings to levels not less than 1 footcandle measured at the center of treads and landings. Exterior stairways shall be provided with an artificial light source located in the immediate vicinity of the top landing of the stairway. Exterior stairways providing access to a basement from the outside grade level shall be provided with an artificial light source located in the immediate vicinity of the bottom landing of the stairway.

Exception: An artificial light source is not required at the top and bottom landing, provided an artificial light source is located directly over each stairway section.

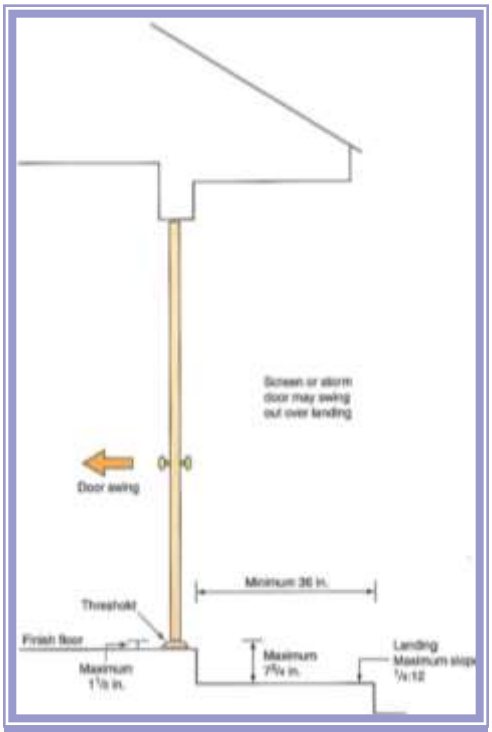

Landing on Exterior Side of Required Egress Door

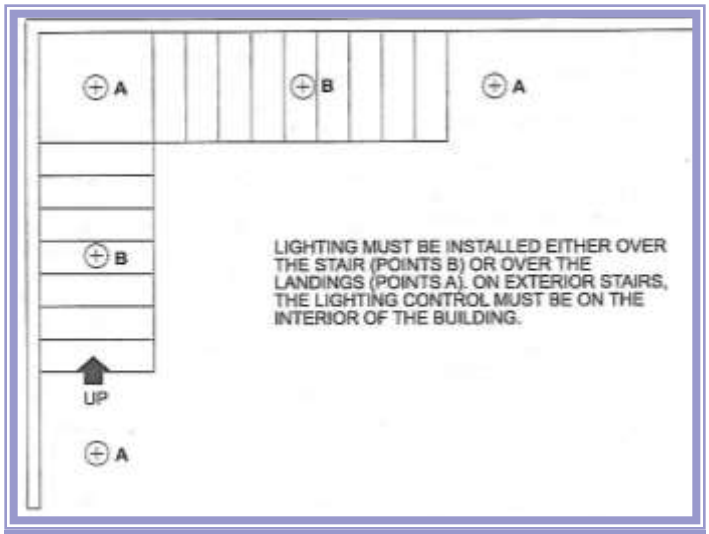

Figure 303.6—Stairway Illumination

Hand Rails and Guard Rails (2012 IRC Section R311.7.8)

Handrails: (2012 IRC Section R311.7.8)

Refer to **Handrail and Guardrail Guidelines** for additional details.

Handrails (R311.7.8): Handrails shall be provided on at least one side of each continuous run of treads or flight with four or more risers.

Height (R311.7.8.1): Handrail height, measured vertically from the sloped plane adjoining the tread nosing, or finish surface of ramp slope, shall be not less than 34 inches and not more than 38 inches.

Exceptions:

1. The use of a volute, turnout or starting easing shall be allowed over the lowest tread.
2. When handrail fittings or bendings are used to provide continuous transition between flights, transitions at winder treads, the transition from handrail to guardrail, or used at the start of a flight, the handrail height at the fittings or bendings shall be permitted to exceed the maximum height.

Continuity (R311.7.8.2): Handrails for stairways shall be continuous for the full length of the flight, from a point directly above the top riser of the flight to a point directly above the lowest riser of the flight. Handrail ends shall be returned or shall terminate in newel posts or safety terminals. Handrails adjacent to a wall shall have a space of not less than 1 ½ inch between the wall and the handrails.

Exceptions:

1. Handrails shall be permitted to be interrupted by a newel post at the turn.
2. The use of a volute, turnout, starting easing or starting newel shall be allowed over the lowest tread.

Guard Rails: (2012 IRC Section R312)

Where required (R312.1.1): Guards shall be located along open-sided walking surfaces, including stairs, ramps and landings, that are located more than 30 inches measured vertically to the floor or grade below at any point within 36 inches horizontally to the edge of the open side. Insect screening shall not be considered as a guard.

Height (R312.1.2): Required guards at open-sided walking surfaces, including stairs, porches, balconies or landings, shall be not less than 36 inches high measured vertically above the adjacent walking surface, adjacent fixed seating or the line connecting the leading edges of the treads.

Exceptions:

1. Guards on the open sides of stairs shall have a height not less than 34 inches measured vertically from a line connecting the leading edges of the treads.
2. Where the top of the guard also serves as a handrail on the open sides of stairs, the top of the guard shall not be less than 34 inches and not more than 38 inches measured vertically from a line connecting the leading edges of the treads.

Opening Limitations (R312.1.3): Required guards on open sides of stairways, raised floor areas, balconies and porches shall have intermediate rails or ornamental closures which do not allow passage of a sphere 4 inches or more in diameter.

Exceptions:

1. The triangular openings formed by the riser, tread and bottom rail of a guard at the open side of a stairway are permitted to be of such a size that a sphere 6 inches cannot pass through.
2. Openings for required guards on the sides of stair treads shall not allow a sphere 4 ⅜ inches to pass through.

Emergency Escape and Rescue Openings (2012 IRC Section R310)

Refer to **egress window at ground floor guidelines** and **egress window non-grade floor guidelines** for additional details and requirements.

Emergency Escape and Rescue Required (R310.1): Basements and every sleeping room shall have at least one operable emergency and rescue opening. Such opening shall open directly into a public street, public alley, yard or court. Where basements contain one or more sleeping rooms, emergency egress and rescue openings shall be required in each sleeping room, but shall not be required in adjoining areas of the basement. Where emergency escape and rescue openings are provided they shall have a sill height of not more than 44 inches above the floor. Where a door opening having a threshold below the adjacent ground elevation serves as an emergency escape and rescue opening and is provided with a bulkhead enclosure, the bulkhead enclosure shall comply with Section R310.3. The net clear opening dimensions required by this section shall be obtained by the normal operation of the emergency escape and rescue opening from the inside. Emergency escape and rescue openings with a finished sill height below the adjacent ground elevation shall be provided with a window well in accordance with Section R310.2. Emergency escape and rescue openings shall open directly into a public way, or to a yard or court that opens to a public way.

Exception: Basements used only to house mechanical equipment and not exceeding total floor area of 200 square feet.

Minimum opening area (R310.1.1): All emergency escape and rescue openings shall have a minimum net clear opening of 5.7 square feet.

Exception: Grade floor openings shall have a minimum net clear opening of 5.0 square feet.

Minimum opening height (R310.1.2): The minimum net clear opening height shall be 24 inches.

Minimum opening width (R310.1.3): The minimum net clear opening width shall be 20 inches.

Operational constraints (R310.1.4): Emergency escape and rescue openings shall be operational from the inside of the room without the use of keys, tools or special knowledge.

Window wells (R310.2): The minimum horizontal area of the window well shall be 9 square feet, with a minimum horizontal projection and width of 36 inches. The area of the window well shall allow the emergency escape and rescue opening to be fully opened.

Exception: The ladder or steps required by Section R310.2.1 shall be permitted to encroach a maximum of 6 inches into the required dimensions of the window well.

Ladder and steps (R310.2.1): Window wells with a vertical depth greater than 44 inches shall be equipped with a permanently affixed ladder or steps usable with the window in the fully open position. Ladders or steps required by this section shall not be required to comply with Sections R311.7 and R311.8. Ladders or rungs shall have an inside width of at least 12 inches, shall project at least 3 inches from the wall and shall be spaced not more than 18 inches on center vertically for the full height of the window well.

Drainage (R310.2.2): Window wells shall be designed for proper drainage by connecting to the building's foundation drainage system required by Section R405.1 or by an approved alternative method.

Exception: A drainage system for window wells is not required when the foundation is on well-drained soil or sand-gravel mixture soils according to the United Soil Classification System, Group I Soils, as detailed in Table R405.1.

Bulkhead Enclosures (R310.3): Bulkhead enclosures shall provide direct access to the basement. The bulkhead enclosure with the door panels in the fully open position shall provide the minimum net clear opening required by Section R310.1.1. Bulkhead enclosures shall also comply with Section R311.5.8.2.

Bars, Grilles, Covers and Screens (R310.4): Bars, grilles, covers, screens or similar devices are permitted to be placed over emergency escape and rescue openings, bulkhead enclosures, or window wells that serve such openings, provided the minimum net clear opening size complies with Sections R310.1.1 to R310.1.3, and such devices shall be releasable or removable from the inside without the use of a key, tool, special knowledge or force greater than that which is required for normal operation of the escape and rescue opening.

Hazardous Glazing (2012 IRC Section R308)

Refer to **Safety Glazing Guideline** for additional details and requirements.

Hazardous Locations (R308.4): The following shall be considered specific hazardous locations for the purposes of glazing:

1. Glazing in all fixed and operable panels of swinging, sliding and bifold doors shall be considered a hazardous location.

Exceptions:

a. Glazed openings of a size through which a 3- inch-diameter sphere is unable to pass.

b. Decorative glazing.

2. Glazing in an individual fixed or operable panel adjacent to a door where the nearest vertical edge of the glazing is within a 24-inch arc of either vertical edge of the door in a closed position and where the bottom exposed edge of the glazing is less than 60 inches above the floor or walking surface shall be considered a hazardous location.

Exceptions:

a. Decorative glazing.

b. When there is an intervening wall or other permanent barrier between the door and the glazing.

c. Glazing in walls on the latch side of and perpendicular to the plane of the door in a closed position.

d. Where access through the door is to a closet or storage area 3 feet or less in depth. Glazing in this application shall comply with section R308.4.3.

e. Glazing that is adjacent to the fixed panel of patio doors.

3. Glazing in an individual fixed or operable panel that meets all of the following conditions shall be considered a hazardous location:

a. The exposed area of an individual pane is larger than 9 square feet;

b. The bottom edge of the glazing is less than 18 inches above the floor;

c. The top edge of the glazing is more than 36 inches above the floor; and

d. One or more walking surfaces are within 36 inches, measured horizontally and in a straight line, of the glazing.

Exceptions:

i. Decorative glazing.

ii. When a horizontal rail is installed on the accessible side(s) of the glazing 34 to 38 inches above the walking surface. The rail shall be capable of withstanding a horizontal load of 50 pounds per linear foot without contacting the glass and be a minimum of 1 ½ inches in cross sectional height.

iii. Outboard panes in insulating glass units and other multiple glazed panels when the bottom edge of the glass is 25 feet or more above grade, a roof, walking surfaces or other horizontal [within 45 degrees of horizontal] surface adjacent to the glass exterior.

4. Glazing in guards and railings, including structural baluster panels and nonstructural in-fill panels, regardless of area or height above a walking surface shall be considered a hazardous location.

5. Glazing in walls, enclosures or fences containing or facing hot tubs, spas, whirlpools, saunas, steam rooms, bathtubs, showers and indoor or outdoor swimming pools where the bottom exposed edge of the glazing is less than 60 inches measured vertically above any standing or walking surface shall be considered a hazardous location. This shall apply to single glazing and all panes in multiple glazing.

Exception: Glazing that is more than 60 inches, measured horizontally and in a straight line, from the water's edge of a bathtub, hot tub, spa, whirlpool, or swimming pool.

6. Glazing where the bottom exposed edge of the glazing is less than 36 inches above the plane of the adjacent walking surface of stairways, landings between flights of stairs and ramps shall be considered a hazardous location.

Exceptions:

a. When a rail is installed on the accessible side(s) of the glazing 34 to 38 inches above the walking surface. The rail shall be capable of withstanding a horizontal load of 50 pounds per linear foot without contacting the glass and be a minimum of 1 ½ inches in cross sectional height.

b. Glazing 36 inches or more measured horizontally from the walking surface.

7. Glazing adjacent to the landing at the bottom of a stairway where the glazing is less than 36 inches above the landing and within 60 inches horizontally of the bottom tread shall be considered a hazardous location.

Exception: The glazing is protected by a guard complying with Section R312 and the plane of the glass is more than 18 inches from the guard.

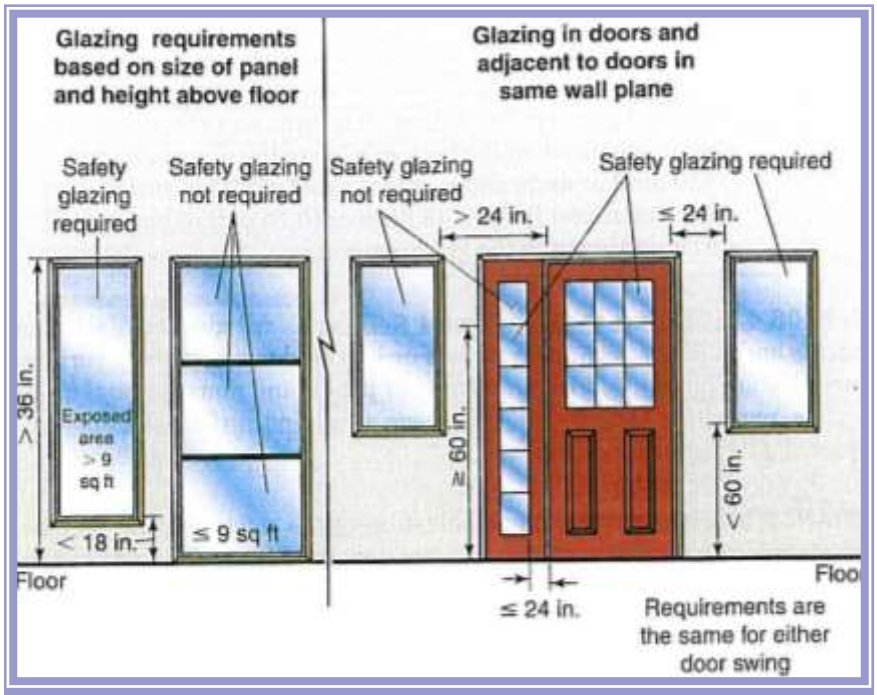

Glazing Requirements

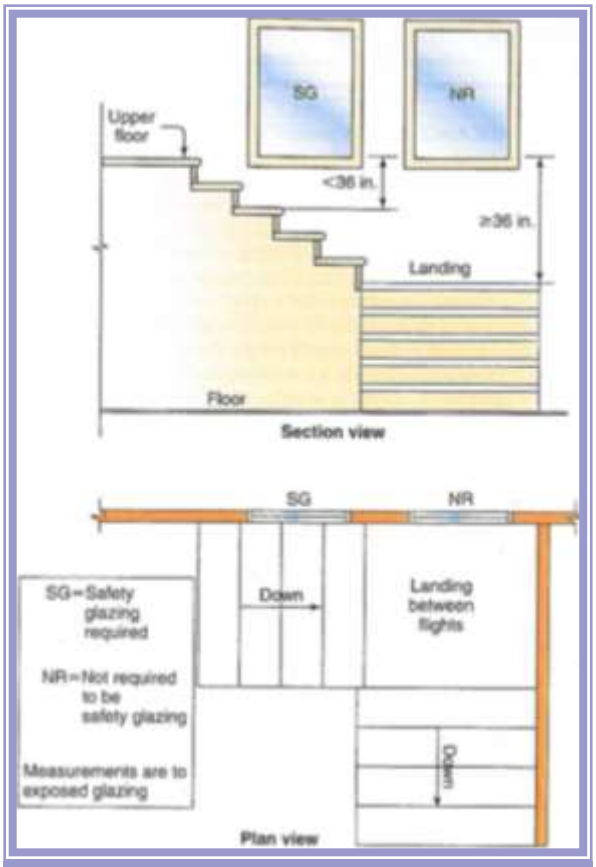

Glazing Adjacent Stairs and Landings Between Flights of Stairs

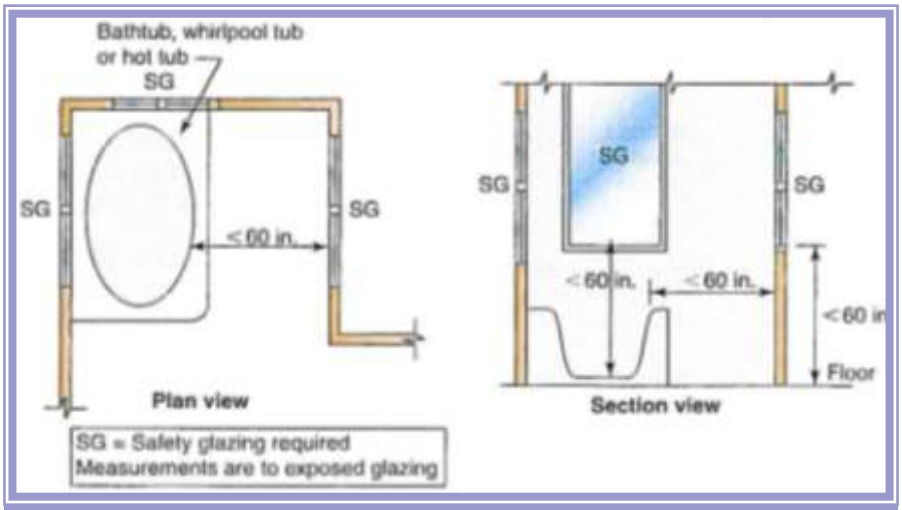

Glazing Facing or Enclosing Bathtubs

Site built windows: (R308.5): Site built windows shall comply with Section 2404 of the International Building Code.

Floodplain Construction

Floodplain construction (R301.2.4): Buildings and structures constructed in whole or in part in flood hazard areas (including A or V Zones) as established in Table R301.2(1) shall be designed and constructed in accordance with Section R322. Buildings and structures located in whole or in part in identified floodways shall be designed and constructed in accordance with ASCE 24.

Protection of mechanical and electrical systems (R322.1.6): Electrical systems, equipment and components; heating, ventilating, air conditioning; plumbing appliances and plumbing fixtures; duct systems; and other service equipment shall be located at or above the elevation required in Section R322.2 (flood hazard areas including A Zones) or R322.3 (coastal high-hazard areas including V Zones). If replaced as part of a substantial improvement, electrical systems, equipment and components; heating, ventilating, air conditioning and plumbing appliances and plumbing fixtures; duct systems; and other service equipment shall meet the requirements of this section. Systems, fixtures, and equipment and components shall not be mounted on or penetrate through walls intended to break away under flood loads.

Exception: Locating electrical systems, equipment and components; heating, ventilating, air conditioning; plumbing appliances and plumbing fixtures; duct systems; and other service equipment is permitted below the elevation required in Section R322.2 (flood hazard areas including A Zones) or R322.3 (coastal high-hazard areas including V Zones) provided that they are designed and installed to prevent water from entering or accumulating within the components and to resist hydrostatic and hydrodynamic loads and stresses, including the effects of buoyancy, during the occurrence of flooding to the design flood elevation in accordance with ASCE 24. Electrical wiring systems are permitted to be located below the required elevation provided they conform to the provisions of the electrical part of this code for wet locations.

Protection of water supply and sanitary sewage systems (R322.1.7): New and replacement water supply systems shall be designed to minimize or eliminate infiltration of flood waters into the systems in accordance with the plumbing provisions of this code. New and replacement sanitary sewage systems shall be designed to minimize or eliminate infiltration of floodwaters into systems and discharges from systems into floodwaters in accordance with the plumbing provisions of this code and Chapter 3 of the International Private Sewage Disposal Code.

Flood-resistant materials (R322.1.8): Building materials used below the elevation required in Section R322.2 (flood hazard areas including A Zones) or R322.3 (coastal high-hazard areas including V Zones) shall comply with the following:

1. All wood, including floor sheathing, shall be pressure-preservative-treated in accordance with AWPA U1 for the species, product, preservative and end use or be the decay-resistant heartwood of redwood, black locust or cedars. Preservatives shall be listed in Section 4 of AWPA U1.
2. Materials and installation methods used for flooring and interior and exterior walls and wall coverings shall conform to the provisions of FEMA/FIA-TB-2.

As-built elevation documentation (R322.1.10): A registered design professional shall prepare and seal documentation of the elevations specified in Section R322.2 or R322.3.

Flood hazard areas (R322.2): All areas that have been determined to be prone to flooding but not subject to high-velocity wave action shall be designated as flood hazard areas. Flood hazard areas that have been delineated as subject to wave heights between 1 ½ feet and 3 feet shall be designated as Coastal A Zones. All building and structures constructed in whole or in part in flood hazard areas shall be designed and constructed in accordance with Sections R322.2.1 through R322.2.3.

Elevation requirements (R322.2.1):

1. Buildings and structures in flood hazard areas not designated as Coastal A Zones shall have the lowest floors elevated to or above the design flood elevation.
2. Buildings and structures in flood hazard areas designated as Coastal A Zones shall have the lowest floors elevated to or above the base flood elevation plus 1 foot, or to the design flood elevation, whichever is higher.
3. In areas of shallow flooding (AO Zones), buildings and structures shall have the lowest floor (including basement) elevated at least as high above the highest adjacent grade as the depth number specified in feet on the FIRM, or at least 2 feet if a depth number is not specified.
4. Basement floors that are below grade on all sides shall be elevated to or above the design flood elevation.

Exception: Enclosed areas below the design flood elevation, including basements whose floors are not below grade on all sides, shall meet the requirements of Section R322.2.2.

Enclosed area below design flood elevation (R322.2.2): Enclosed areas, including crawl spaces, that are below the design flood elevation shall:

1. Be used solely for parking of vehicles, building access or storage.
2. Be provided with flood openings that meet the following criteria:
   a. There shall be a minimum of two openings on different sides of each enclosed area; if a building has more than one enclosed area below the design flood elevation, each area shall have openings on exterior walls.
   b. The total net area of all openings shall be at least 1 square inch for each square foot of enclosed area, or the openings shall be designed and the construction documents shall include a statement by a registered design professional that the design of the openings will provide for equalization of hydrostatic flood forces on exterior walls by allowing for the automatic entry and exit of floodwaters as specified in Section 2.6.2.2 of ASCE 24.
   c. The bottom of each opening shall be 1 foot or less above the adjacent ground level.
   d. Openings shall be not less than 3 inches in any direction in the plane of the wall.
   e. Any louvers, screens or other opening covers shall allow the automatic flow of floodwaters into and out of the enclosed area.
   f. Openings installed in doors and windows, that meet requirements (a) through (e), are acceptable; however, doors and windows without installed openings do not meet the requirements of this section.

Foundation design and construction (R322.2.3): Foundation walls for all buildings and structures erected in flood hazard areas shall meet the requirements of Chapter 4.

Exception: Unless designed in accordance with Section R404:

1. The unsupported height of 6-inch plain masonry walls shall be no more than 3 feet.
2. The unsupported height of 8-inch plain masonry walls shall be no more than 4 feet.
3. The unsupported height of 8-inch reinforced masonry walls shall be no more than 8 feet.

For the purpose of this exception, unsupported height is the distance from the finished grade of the under-floor space to the top of the wall.

Walls below design flood elevation (R322.3.4): Walls and partitions are permitted below the elevated floor, provided that such walls and partitions are not part of the structural support of the building or structure and:

1. Electrical, mechanical, and plumbing system components are not to be mounted on or penetrate through walls that are designed to break away under flood loads; and
2. Are constructed with insect screening or open lattice; or
3. Are designed to break away or collapse without causing collapse, displacement or other structural damage to the elevated portion of the building or supporting foundation system. Such walls, framing and connections shall have a design safe loading resistance of not less than 10 and no more than 20 pounds per square foot; or
4. Where wind loading values of this code exceed 20 pounds per square foot, the construction documents shall include documentation prepared and sealed by a registered design professional that:
   a. The walls and partitions below the design flood elevation have been designed to collapse from a water load less than that which would occur during the design flood.
   b. The elevated portion of the building and supporting foundation system have been designed to withstand the effects of wind and flood loads acting simultaneously on all building components (structural and nonstructural). Water-loading values used shall be those associated with the design flood. Wind-loading values shall be those required by this code.

Enclosed areas below design flood elevation (R322.3.5): Enclosed areas below the design flood elevation shall be used solely for parking of vehicles, building access or storage.

Construction documents (R322.3.6): The construction documents shall include documentation that is prepared and sealed by a registered design professional that the design and methods of construction to be used meet the applicable criteria of this section.

Framing

Refer to span charts for additional details and requirements

Girders

Refer to **Girder and Header Span Charts for Exterior Walls** and **Girder and Header Span Chart for Interior Walls** for additional details and requirements

Girders are the main horizontal support members upon which the floor system is laid and are supported by posts, beam pockets, and piers. The arrangement of the girders under the floor system is dependent on the design of the floor system itself and the load it is expected to carry. Some girders are positioned to carry only floor load while others will have to support floors, walls and roof structures. This can result in girders of various size and spacing. The most common method of laying out girders is to determine the size of the largest girder required and use girders of like size in all locations where they will be needed. This results in a uniform design and makes the job of framing easier. The allowable spans of girders fabricated of dimension lumber shall not exceed the values set forth in Tables R502.5(1) and R502.5(2).

Floors

Refer to **Floor Joist Span Chart for Bedrooms** and **Floor Joist Span Chart for Living Areas** for additional details and requirements

All lumber for joists, beams and girders shall be grade marked by an approved agency and shall be minimum of grade #3.

Bearing (R502.6): The ends of each joist, beam or girder shall have not less than 1 ½ inches of bearing on wood or metal and not less than 3 inches on masonry or concrete except where supported on a 1-inch by 4-inch ribbon strip and nailed to the adjacent stud or by the use of approved joist hangers. The bearing on masonry or concrete shall be direct, or a sill plate of 2-inch-minimum nominal thickness shall be provided under the joist, beam or girder. The sill plate shall provide a minimum nominal bearing area of 48 square inches.

Floor systems (R502.6.1): Joists framing from opposite sides over a bearing support shall lap a minimum of 3 inches and shall be nailed together with a minimum three 10d face nails. A wood or metal splice with strength equal to or greater than that provided by the nailed lap is permitted.

Joist framing (R502.6.2): Joists framing into the side of a wood girder shall be supported by approved framing anchors or on ledger strips not less than nominal 2 inches by 2 inches.

Sawn lumber (R502.8.1): Notches in solid lumber joists, rafters and beams shall not exceed one-sixth of the depth of the member, shall not be longer than one-third of the depth of the member and shall not be located in the middle one-third of the span. Notches at the ends of the member shall not exceed one-fourth the depth of the member. The diameter of holes bored or cut into members shall not exceed one-third the depth of the member. Holes shall not be closer than 2 inches to the top or bottom of the member, or to any other hole located in the member. Where the member is also notched, the hole shall not be closer than 2 inches to the notch.

Joists under bearing partitions (R502.4): Joists under parallel bearing partitions shall be of adequate size to support the load. Double joists, sized to adequately support the load, that are separated to permit the installation of piping or vents shall be full depth solid blocked with lumber not less than 2 inches in nominal thickness spaced not more than 4 feet on center. Bearing partitions perpendicular to joists shall not be offset from supporting girders, walls or partitions more than the joist depth unless such joists are of sufficient size to carry the additional load.

Allowable joist spans (R502.3): The clear span of girders and floor joist shall not exceed the values set forth in IRC Tables R502.3.1(1) through R502.3.1(2).

Framing of openings (R502.10): Openings over four (4) feet shall be framed with a header and trimmer joists.

Wood truss design (R502.11.1): Floor trusses shall be designed and installed in accordance with approved engineering practices.

Alterations to trusses (R502.11.3): Truss members and components shall not be cut, notched, spliced or otherwise altered in any way without the approval of a registered design professional. Alterations resulting in the addition of load (e.g., HVAC equipment, water heater, etc.), that exceed the design load for the truss, shall not be permitted without verification that the truss is capable of supporting the additional loading. See Figure R502.8.

Fire Protection of Floors (R501.3): Floor assemblies shall be provided with a $^{1}/_{2}$ inch gypsum wallboard membrane, $^{5}/_{8}$ inch wood structural panel membrane, or equivalent on the underside of the floor framing member.

Exceptions: 1. Floor assemblies located directly over a space protected by an automatic sprinkler system.

.....2. Floor assemblies located directly over a crawl space not intended for storage or fuel-fired equipment.

.....3. Portions of floor assemblies can be protected when complying with the following:

..... 3.1 The aggregate area of the unprotected portions shall not exceed 80 square feet per story.

..... 3.2 Fire blocking in accordance with Section R302.11.1 shall be installed along the perimeter of the unprotected
..... portion to separate the unprotected portion from the remainder of the floor assembly.

.....4. Wood floor assemblies using dimensional lumber or structural composite lumber equal to or greater than 2 inch
.....by 10 inch nominal dimension, or other approved floor assemblies demonstrating equivalent fire performance.

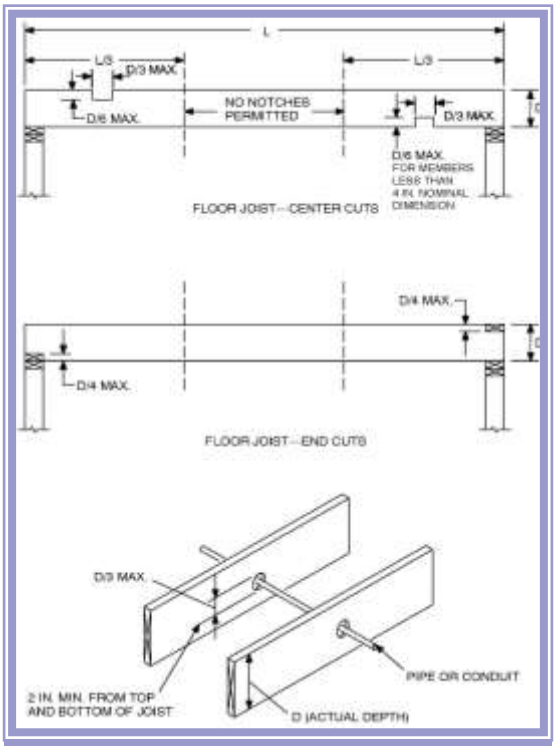

Figure R502.8—Cutting, Notching and Drilling

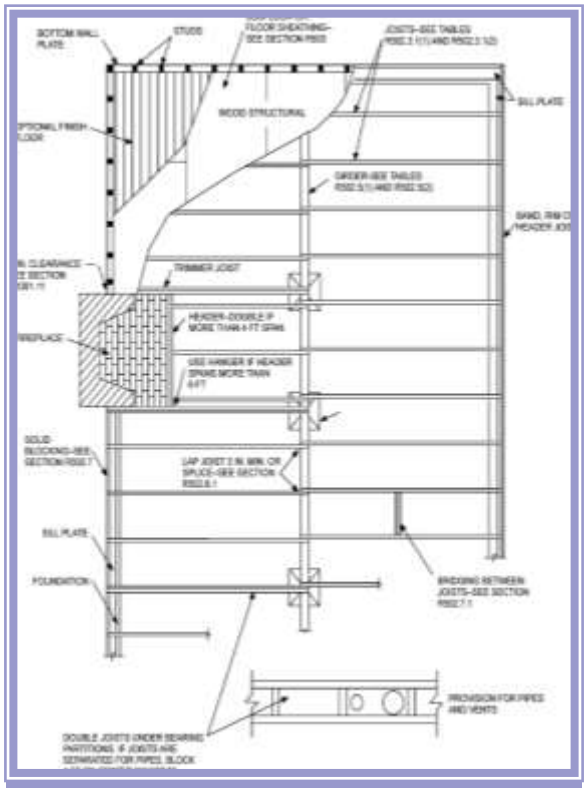

Figure R502.2—Floor Construction

Walls (2012 IRC Section R602)

Identification (R602.1): Load-bearing dimension lumber for studs, plates and headers shall be identified by a grade mark of a lumber grading or inspection agency that has been approved by an accreditation body that complies with DOC PS 20. In lieu of a grade mark, a certification of inspection issued by a lumber grading or inspection agency meeting the requirements of this section shall be accepted.

End-jointed lumber (R602.1.1): Approved end-jointed lumber identified by a grade mark conforming to Section R602.1 may be used interchangeably with solid-sawn members of the same species and grade. End-jointed lumber used in an assembly required elsewhere in this code to have a fire-resistance rating shall have the designation "Heat Resistant Adhesive" or "HRA" included in its grade mark.

Grade (R602.2): Studs shall be a minimum No. 3, standard or stud grade lumber.

Exception: Bearing studs not supporting floors and nonbearing studs may be utility grade lumber, provided the studs are spaced in accordance with Table R602.3(5).

Drilling and notching of studs (R602.6): Drilling and notching of studs shall be in accordance with the following:

1. Notching. Any stud in an exterior wall or bearing partition may be cut or notched to a depth not exceeding 25 percent of its width. Studs in nonbearing partitions may be notched to a depth not to exceed 40 percent of a single stud width.
2. Drilling. Any stud may be bored or drilled, provided that the diameter of the resulting hole is no more than 60 percent of the stud width, the edge of the hole is no more than 5/8 inch to the edge of the stud, and the hole is not located in the same section as a cut or notch. Studs located in exterior walls or bearing partitions drilled over 40 percent and up to 60 percent shall also be doubled with no more than two successive doubled studs bored. See Figures R602.6(1) and R602.6(2).

Exception: Use of approved stud shoes is permitted when they are installed in accordance with the manufacturer's recommendations.

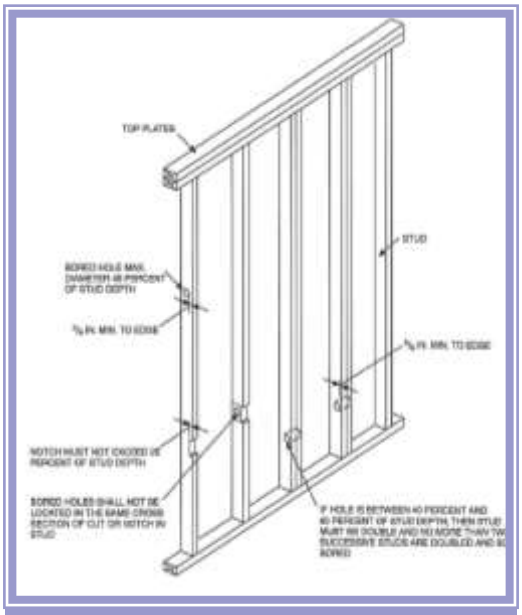

Figure R602.6(1) - Notching and Bored

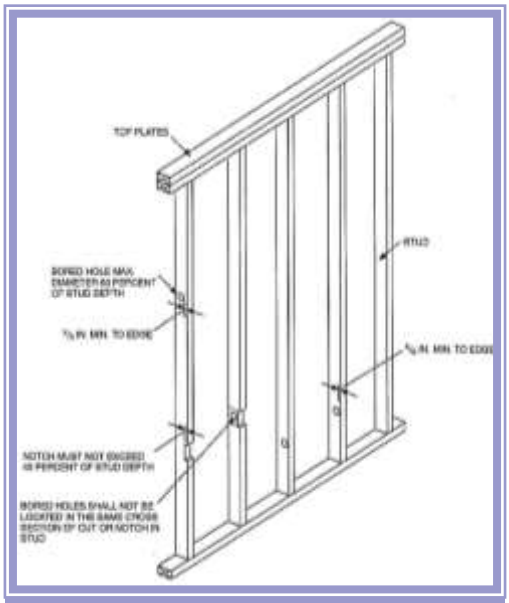

Figure R602.6(2) - Notching and Bored

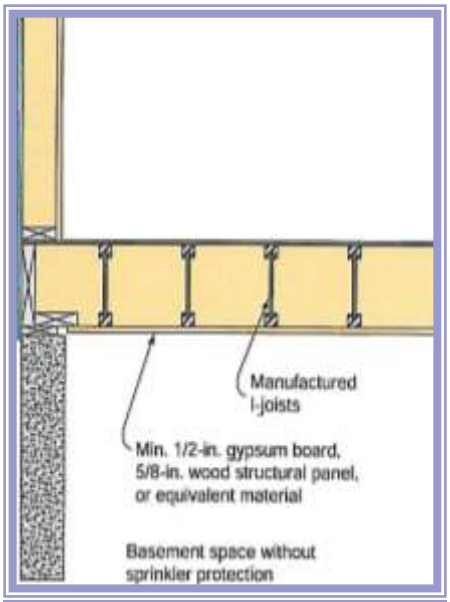

Fire Protection of Floors

Drilling and Notching of the top plates (R602.6.1): When piping or ductwork is placed in or partly in an exterior wall or interior load-bearing wall, necessitating cutting, drilling or notching of the top plate by more than 50 percent of its width, a galvanized metal tie not less than 0.054 inch thick (16 gauge) and 1 ½ inches wide shall be fastened across and to the plate at each side of the opening with not less than eight 10d nails having a minimum length of 1 ½ inches at each side or equivalent. The metal tie must extend a minimum of 6 inches past the opening. See Figure R602.6.1.

Exception: When the entire side of the wall with the notch or cut is covered by wood structural panel sheathing.

Cripple walls (R602.9): Foundation cripple walls shall be framed of studs not smaller than the studding above. When exceeding 4 feet in height, such walls shall be framed of studs having the size required for an additional story. Cripple walls with a stud height less than 14 inches shall be continuously sheathed on one side with wood structural panels fastened to both the top and bottom plates in accordance with Table R602.3(1), or the cripple walls shall be constructed of solid blocking. All cripple walls shall be supported on continuous foundations.

Open web floor trusses require a fire protection membrane applied to the underside.

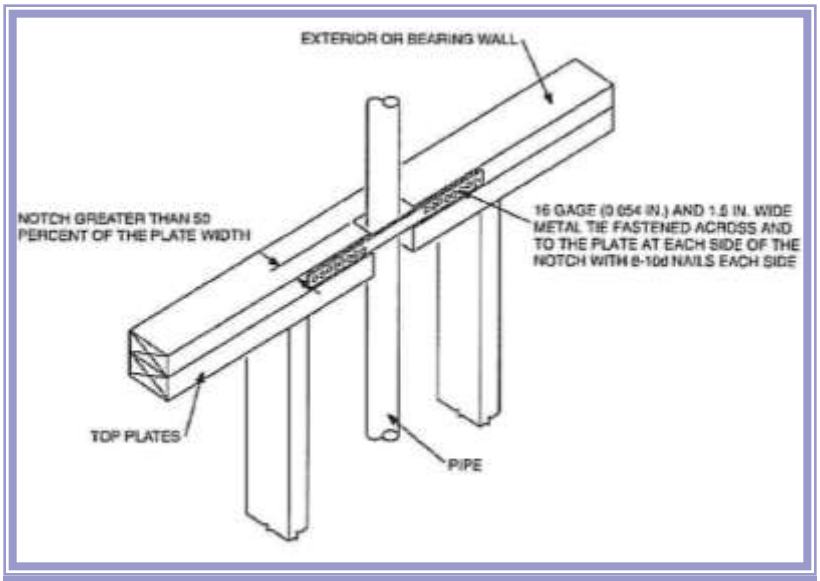

Figure R602.6.1—Top Plate Framing to Accommodate Piping

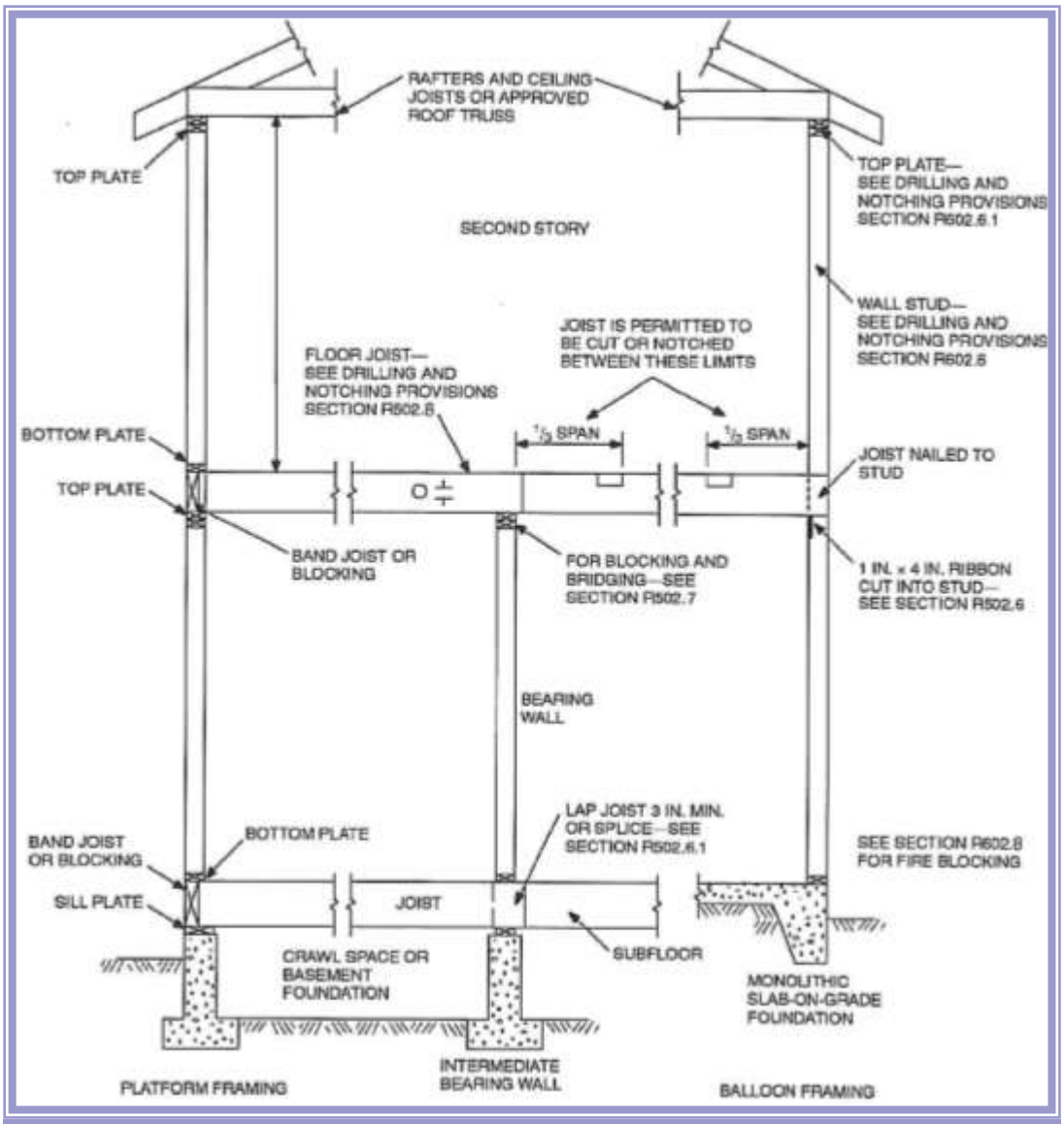

Figure R602.3(1) - Typical Wall, Floor and Roof Framing

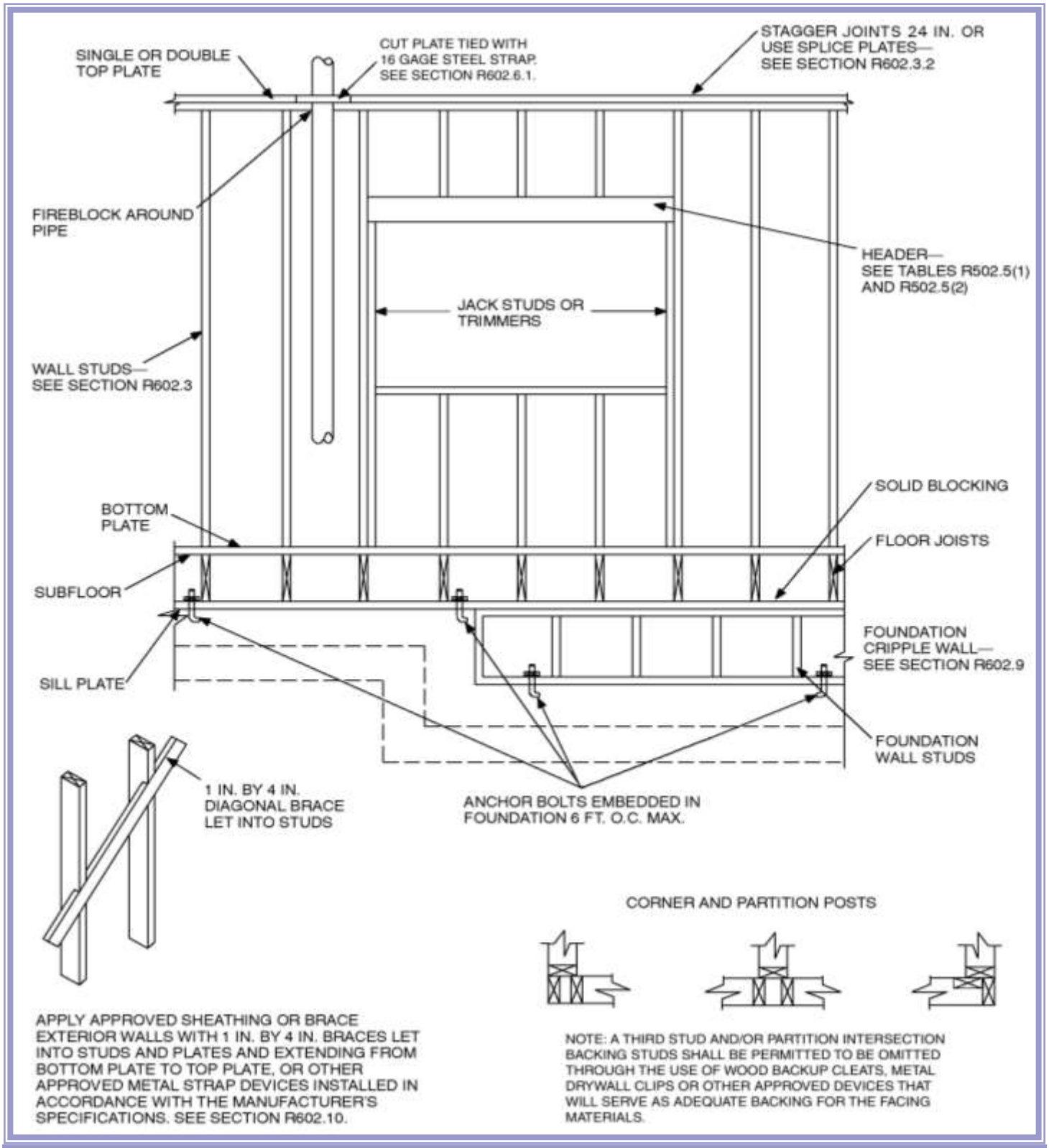

Figure R602.3(2) - Framing Details

Table R602.3(1) - Fastener Schedule for Structural Members				
Item	Description of Building Elements	Number and Type of Fastener [a, b, c]	Spacing of Fasteners	
Roof				
1	Blocking between joists or rafters to top plate: toe nail	3 – 8d	-	
2	Ceiling joists to plate, toe nail	3 – 8d	-	
3	Ceiling joists not attached to parallel rafter, laps over partitions: toe nail	3 – 10d	-	
4	Collar tie to rafter: face nail or 1-1/4" x 20 gauge ridge strap	3 – 10d	-	
5	Rafter or roof truss to plate: toe nail	3 – 16d box nails or 3 – 10d common nails	2 toe nails on one side and 1 toe nail on opposite side of each rafter or truss[j]	
6	Roof rafters to ridge, valley or hip rafters: toe nail, face nail	Toe = 4 – 16d, Face = 3 – 16d	-	
Wall				
7	Built-up studs-face nail	10d	24" o.c.	
8	Abutting studs at intersecting wall corners, face nail	16d	12" o.c.	
9	Built-up header, two pieces with 1/2" spacer	16d	16" o.c. along each edge	
10	Continued header, two pieces	16d	16" o.c. along each edge	
11	Continuous header to stud, toe nail	4-8d	-	
12	Double studs, face nail	10d	24" o.c.	
13	Double top plates, face nail	10d	24" o.c.	
14	Double top plates, minimum 24-inch offset of end joints, face nail in lapped area	8 - 16d	-	
15	Sole plate to joist or blocking, face nail	16d	16" o.c.	
16	Sole plate to joist or blocking at braced wall panels	3 - 16d	16" o.c.	
17	Stud to sole plate, toe nail	3 - 8d or 2 - 16d	-	
18	Top or sole plate to stud, end nail	2 - 16d	-	
19	Top plates, laps at corners and intersections, face nail	2 - 10d	-	
20	1" brace to each stud and plate, face nail	2 - 8d or 2 staples 1-3/4"	-	
21	1" × 6" sheathing to each bearing, face nail	2 - 8d or 2 staples 1-3/4"	-	
22	1" × 8" sheathing to each bearing, face nail	2 - 8d or 3 staples 1-3/4"	-	
23	Wider than 1" × 8" sheathing to each bearing, face nail	3 - 8d or 4 staples 1-3/4"	-	
Floor				
24	Joist to sill or girder, toe nail	3-8d	-	
25	Rim joist to top plate, toe nail (roof applications also)	8d	6" o.c.	
26	Rim joist or blocking to sill plate, toe nail	8d	6" o.c.	
27	1" × 6" subfloor or less to each joist, face nail	2 - 8d or 2 staples 1-3/4"	-	
28	2" subfloor to joist or girder, blind and face nail	2-16d	-	
29	2" planks (plank & beam - floor & roof)	2-16d	At each bearing	
30	Built-up girders and beams, 2-inch lumber layers	10d	Nail each layer as follows: 32" o.c. at top and bottom and staggered. Two nails at ends and at each splice.	
31	Ledger strip supporting joists or rafters	3-16d	At each joist or rafter	
Item	Description of Building Elements	Number and Type of Fastener[b, c, e]	Spacing of Fasteners	
			Edges[i]	Intermediate
Wood structural panels, subfloor, roof and interior wall sheathing to framing and particleboard wall sheathing to framing				
32	3/8" - 1/2"	6d common nail (subfloor wall)[j] 8d common nail (roof)[f]	6"	12"[g]
33	19/32" - 1"	8d common nail	6"	12"[g]
34	1-1/8" – 1-1/4"	10d common nail or 8d deformed nail	6"	12"
Other wall sheathing[h]				
35	1/2" structural cellulosic fiberboard sheathing	1-1/2" galvanized roofing nail, 7/16" crown or 1" crown staple 16 gauge, 1-1/4" long	3"	6"
36	25/32" structural cellulosic fiberboard sheathing	1-3/4" galvanized roofing nail, 7/16" crown or 1" crown staple 16 gauge, 1-1/2" long	3"	6"
37	1/2" gypsum sheathing[d]	1-1/2" galvanized roofing nail; staple galvanized, 1-1/2" long; 1-1/4 screws, Type W or S	7"	7"
38	5/8" gypsum sheathing[d]	1-3/4" galvanized roofing nail; staple galvanized, 1-5/8" long; 1-5/8" screws, Type W or S	7"	7"
Wood structural panels, combination subfloor underlayment to framing				
39	3/4" and less	6d deformed nail or 8d common nail	6"	12"
40	7/8" - 1"	8d deformed nail or 8d common nail	6"	12"
41	1-1/8" – 1-1/4"	8d deformed nail or 10d common nail	6"	12"

a. All nails are smooth-common, box or deformed shanks except where otherwise stated. Nails used for framing and sheathing connections shall have minimum average bending yield strengths as shown: 80 ksi for shank diameter of 0.192 inch (20d common nail), 90 ksi for shank diameters larger than 0.142 inch but not larger than 0.177 inch, and 100 ksi for shank diameters of 0.142 inch or less.

b. Staples are 16 gage wire and have a minimum 7/16-inch on diameter crown width.

c. Nails shall be spaced at not more than 6 inches on center at all supports where spans are 48 inches or greater.

d. Four-foot by 8-foot or 4-foot by 9-foot panels shall be applied vertically.

e. Spacing of fasteners not included in this table shall be based on Table R602.3(2).

f. For regions having basic wind speed of 110 mph or greater, 8d deformed (21/2" × 0.120) nails shall be used for attaching plywood and wood structural panel roof sheathing to framing within minimum 48-inch distance from gable end walls, if mean roof height is more than 25 feet, up to 35 feet maximum.

g. For regions having basic wind speed of 100 mph or less, nails for attaching wood structural panel roof sheathing to gable end wall framing shall be spaced 6 inches on center. When basic wind speed is greater than 100 mph, nails for attaching panel roof sheathing to intermediate supports shall be spaced 6 inches on center for minimum 48-inch distance from ridges, eaves and gable end walls; and 4 inches on center to gable end wall framing.

h. Gypsum sheathing shall conform to ASTM C 1396 and shall be installed in accordance with GA 253. Fiberboard sheathing shall conform to ASTM C 208.

i. Spacing of fasteners on floor sheathing panel edges applies to panel edges supported by framing members and required blocking and at all floor perimeters only. Spacing of fasteners on roof sheathing panel edges applies to panel edges supported by framing members and required blocking. Blocking of roof or floor sheathing panel edges perpendicular to the framing members need not be provided except as required by other provisions of this code. Floor perimeter shall be supported by framing members or solid blocking.

j. Where a rafter is fastened to an adjacent parallel ceiling joist in accordance with this schedule, provide two toe nails on one side of the rafter and toe nails from the ceiling joist to top plate in accordance with this schedule. The toe nail on the opposite side of the rafter shall not be required.

Simplified Wall Bracing

Simplified wall bracing (R602.12): Buildings meeting all of the conditions listed in items 1-8 shall be permitted to be braced in accordance with this section as an alternative to the requirements of Section R602.10. The entire building shall be braced in accordance with this section; the use of other bracing provisions of R602.10, except as specified herein, shall not be permitted.

1. There shall be no more than two stories above the top of a concrete or masonry foundation or basement wall. Permanent wood foundations shall not be permitted.
2. Floors shall not cantilever more than 24 inches beyond the foundation or bearing wall below.
3. Wall height shall not be greater than 10 feet.
4. The building shall have a roof eave-to-ridge height of 15 feet or less.
5. All exterior walls shall have gypsum board with a minimum thickness of $^1/_2$ inch installed on the interior side fastened in accordance with Table R702.3.5.
6. The structure shall be located where the basic wind speed is less than or equal to 90 mph, and the Exposure Category is A or B.
7. The structure shall be located in Seismic Design Category A, B or C for detached one- and two-family dwellings or Seismic Design Category A or B for townhouses.
8. Cripple walls shall not be permitted in two-story buildings.

Circumscribed rectangle (R602.12.1): The bracing required for each building shall be determined by circumscribing a rectangle around the entire building on each floor as shown in Figure R602.12.1. The rectangle shall surround all enclosed offsets and projections such as sunrooms and attached garages. Open structures, such as carports and decks, shall be permitted to be excluded. The rectangle shall have no side greater than 60 feet, and the ratio between the long side and short side shall be a maximum of 3:1.

Sheathing materials (R602.12.2): The following sheathing materials installed on the exterior side of exterior walls shall be used to construct a bracing unit as defined in Section R602.12.3. Mixing materials is prohibited.

1. Wood structural panels with a minimum thickness of $^3/_8$ inch fastened in accordance with Table R602.3(3).
2. Structural fiberboard sheathing with a minimum thickness of ½ inch fastened in accordance with Table R602.3(1).

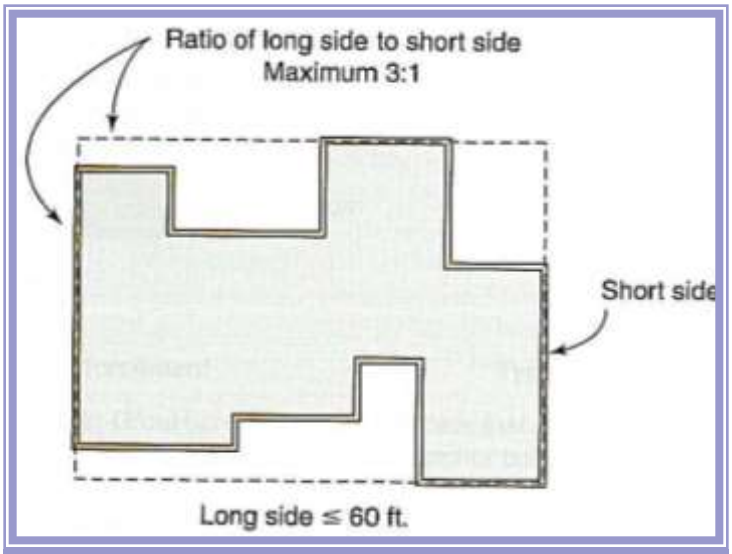

Circumscribed Rectangle

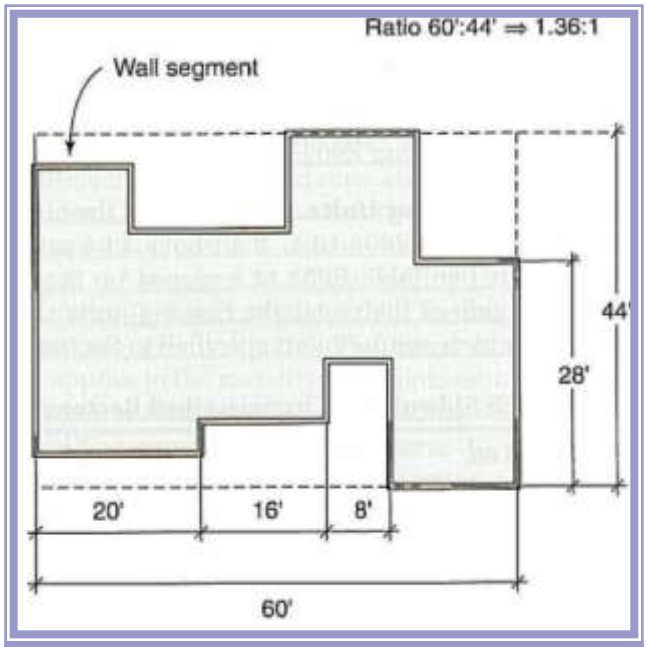

Maximum Side Length

Bracing unit (R602.12.3): A bracing unit shall be a full height sheathed segment of the exterior wall with no openings or vertical or horizontal offsets and a minimum length as specified herein. Interior walls shall not contribute toward the amount of required bracing. Mixing of Items 1 and 2 is prohibited on the same story.

1. Where all framed portions of all exterior walls are sheathed in accordance with Section R602.12.2, including wall areas between bracing units, above and below openings and on gable end walls, the minimum length of a bracing unit shall be 3 feet.
2. Where the exterior walls are braced with sheathing panels in accordance with Section R602.12.2 and areas between bracing units are covered with other materials, the minimum length of a bracing unit shall be 4 feet.

Multiple bracing units (R602.12.3.1): Segments of wall compliant with Section R602.12.3 and longer than the minimum bracing unit length shall be considered as multiple bracing units. The number of bracing units shall be determined by dividing the wall segment length by the minimum bracing unit length. Full-height sheathed segments of wall narrower than the minimum bracing unit length shall not contribute toward a bracing unit except as specified in Section R602.12.6.

Number of bracing units (R602.12.4): Each side of the circumscribed rectangle, as shown in Figure R602.12.1, shall have, at a minimum, the number of bracing units in accordance with Table R602.12.4 placed on the parallel exterior walls facing the side of the rectangle. Bracing units shall then be placed using the distribution requirements specified in Section R602.12.5.

Story Level	Eave-to-Ridge Height (feet)	Minimum Number of Bracing Units on Each Long Side [a, b] Length of Short Side (feet) [c]						Minimum Number of Bracing Units on Short Side [a,b] Length of Long Side (feet) [c]					
		10	20	30	40	50	60	10	20	30	40	50	60
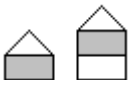	10	1	2	2	2	3	3	1	2	2	2	3	3
		2	3	3	4	5	6	2	3	3	4	5	6
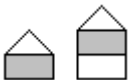	20	1	2	3	3	4	4	1	2	3	3	4	4
		2	3	4	5	6	7	2	3	4	5	6	7

a. Interpolation shall not be permitted.

b. Cripple walls or wood-framed basement walls in a walk-out condition of a one-story structure shall be designed as the first floor of a two-story house.

c. Actual lengths of the sides of the circumscribed rectangle shall be rounded to the next highest unit of 10 when using this table.

Distribution of bracing units (R602.12.5): The placement of bracing units on exterior walls shall meet all of the following requirements as shown in Figure R602.12.5.

1. A bracing unit shall begin no more than 12 feet from any wall corner.
2. The distance between adjacent edges of bracing units shall be no greater than 20 feet.
3. Segments of wall greater than 8 feet in length shall have a minimum of one bracing unit.

Narrow panels (R602.12.6): The bracing methods referenced in Section R602.10 and specified in Sections R602.12.6.1 through R602.12.6.3 shall be permitted when using simplified wall bracing.

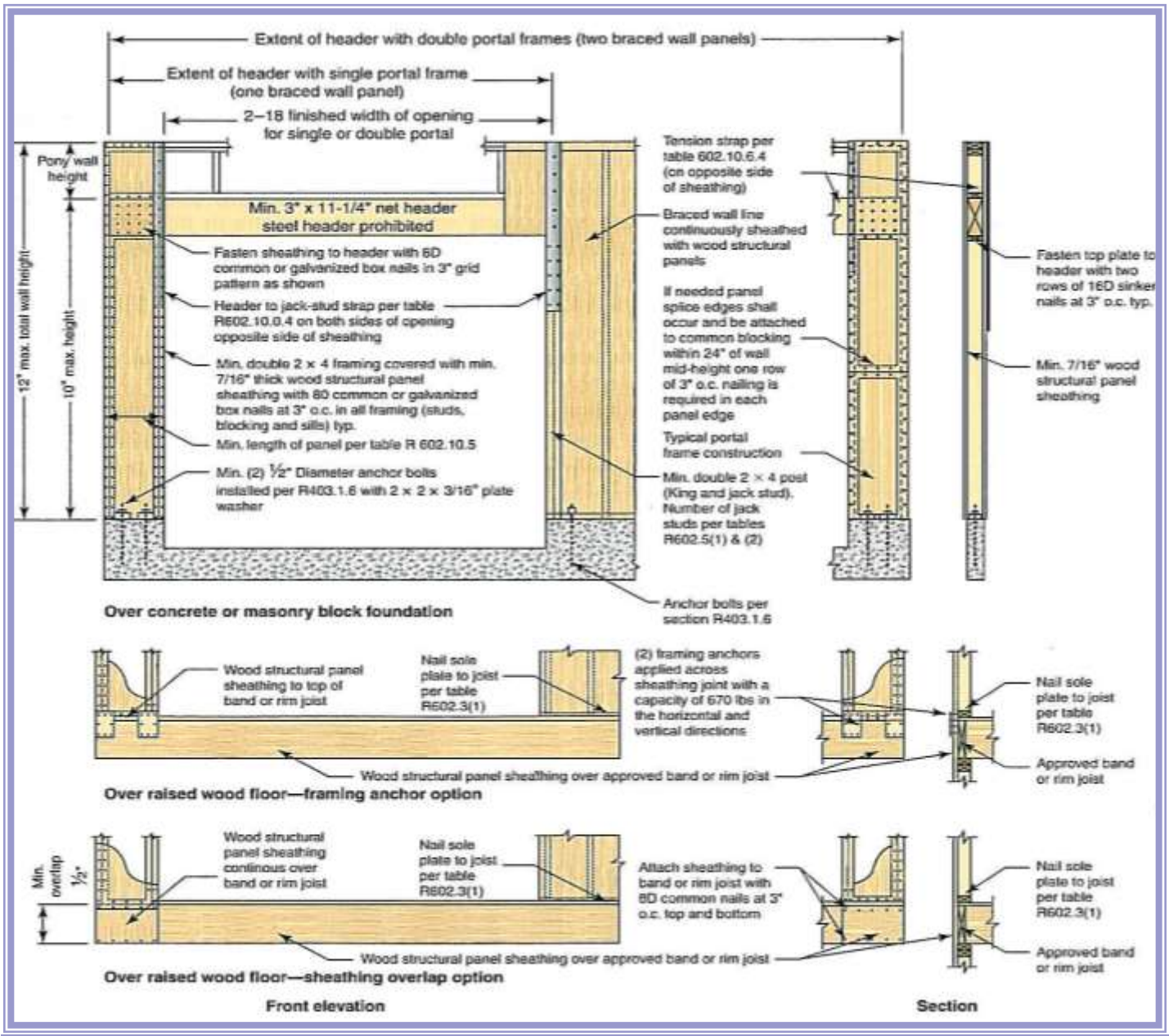

Method CS-PF: Continuously Sheathed Portal Frame Panel Construction

Method CS-G (R602.12.6.1): Braced wall panels constructed as Method CS-G in accordance with Tables R602.10.4 and R602.10.5 shall be permitted for one story garages when all framed portions of all exterior walls are sheathed with wood structural panels. Each CS-G panel shall be equivalent to 0.5 of a bracing unit. Segments of wall which include a Method CS-G panel shall meet the requirements of Section R602.10.4.2.

Method CS-PF (R602.12.6.2): Braced wall panels constructed as Method CS-PF in accordance with Section R602.10.6.4 shall be permitted when all framed portions of all exterior walls are sheathed with wood structural panels. Each CS-PF panel shall equal 0.5 bracing units. A maximum of four CS-PF panels shall be permitted on all segments of walls parallel to each side of the circumscribed rectangle. Segments of wall which include a Method CS-PF panel shall meet the requirements of Section R602.10.4.2.

Methods PFH and PFG (R602.12.6.3): Braced wall panels constructed as Method PFH and PFG shall be permitted when bracing units are constructed using wood structural panels. Each PFH panel shall equal one bracing unit and each PFG panel shall be equal to 0.75 bracing units.

Lateral support (R602.12.7): For bracing units located along the eaves, the vertical distance from the outside edge of the top wall plate to the roof sheathing above shall not exceed 9-$^{1}/_{4}$ inches at the location of a bracing unit unless lateral support is provided in accordance with Section R602.10.8.2.

Stem walls (R602.12.8): Masonry stem walls with a height and length of 48 inches or less supporting a bracing unit or a Method CS-G, CS-PF or PFG braced wall panel shall be constructed in accordance with Figure R602.10.9. Concrete stem walls with a length of 48 inches or less, greater than 12 inches tall and less than 6 inches thick shall be reinforced sized and located in accordance with Figure R602.10.9.

Fire Blocking

Fire Blocking (R302.11): In combustible construction, fire blocking shall be provided to cut off all concealed draft openings (both vertical and horizontal) and to form an effective fire barrier between stories, and between a top story and the roof space. Fire blocking shall be provided in wood-frame construction in the following locations:

1. In concealed spaces of stud walls and partitions, including furred spaces and parallel rows of studs or staggered studs, as follows:
   a. Vertically at the ceiling and floor levels.
   b. Horizontally at intervals not exceeding 10 feet.
2. At all interconnections between concealed vertical and horizontal spaces such as occur at soffits, drop ceilings and cove ceilings.
3. In concealed spaces between stair stringers at the top and bottom of the run. Enclosed spaces under stairs shall comply with Section R302.7.
4. At openings around vents, pipes, ducts, cables and wires at ceiling and floor level, with an approved material to resist the free passage of flame and products of combustion. The material filling this annular space shall not be required to meet the ASTM E 136 requirements.
5. For the fire blocking of chimneys and fireplaces, see Section R1003.19.
6. Fire blocking of cornices of a two-family dwelling is required at the line of dwelling unit separation.

Fire blocking materials (R302.11.1): Except as provided in Section R302.11, Item 4, fire blocking shall consist of the following materials.

1. Two-inch nominal lumber.
2. Two thicknesses of 1-inch nominal lumber with broken lap joints.
3. One thickness of 23/32-inch wood structural panels with joints backed by 23/32-inch wood structural panels.
4. One thickness of ¾ -inch particleboard with joints backed by ¾ -inch particleboard.
5. One-half-inch gypsum board.

6. One-quarter-inch cement-based millboard.
7. Batts or blankets of mineral wool or glass fiber or other approved materials installed in such a manner as to be securely retained in place.
8. Cellulose insulation installed as tested for the specific application.

Batts or blankets of mineral or glass fiber (R302.11.1.1): Batts or blankets of mineral or glass fiber or other approved non-rigid materials shall be permitted for compliance with the 10-foot horizontal fire blocking in walls constructed using parallel rows of studs or staggered studs.

Unfaced fiberglass (R302.11.1.2): Unfaced fiberglass batt insulation used as fire blocking shall fill the entire cross section of the wall cavity to a minimum height of 16 inches measured vertically. When piping, conduit or similar obstructions are encountered, the insulation shall be packed tightly around the obstruction.

Loose-fill insulation material (R302.11.1.3): Loose-fill insulation material shall not be used as a fire block unless specifically tested in the form and manner intended for use to demonstrate its ability to remain in place and to retard the spread of fire and hot gases.

Fire blocking integrity (R302.11.2): The integrity of all fire blocks shall be maintained.

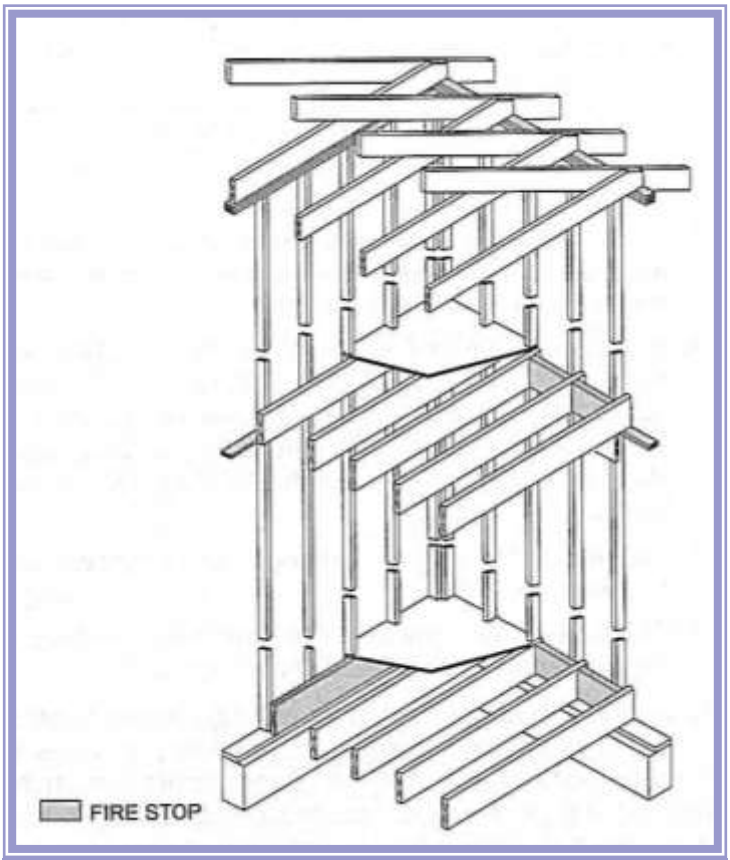

Figure R302.11(1) - Fire Stopping in Balloon Framing

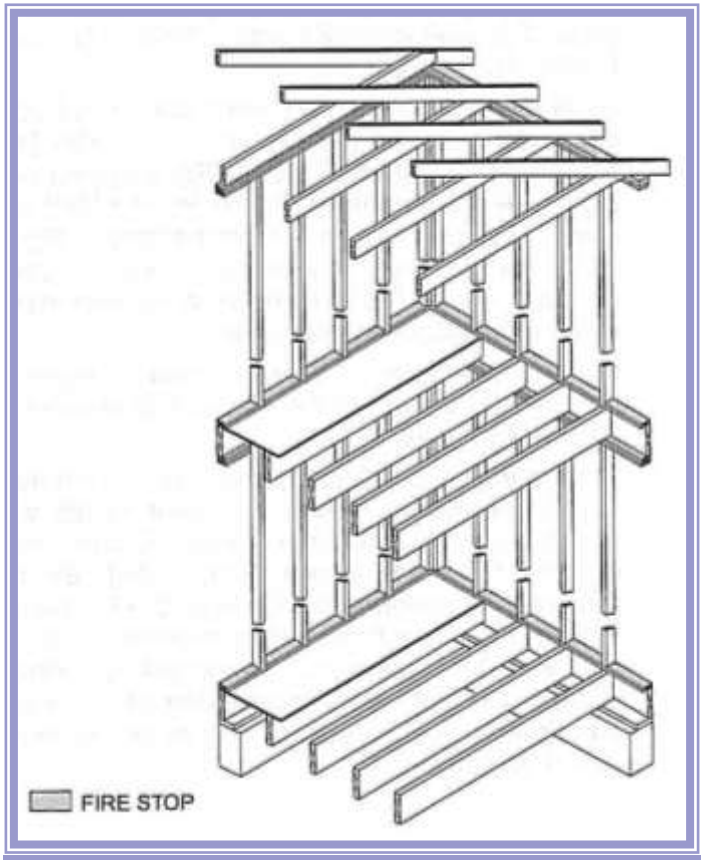

Figure R302.11(2) - Fire Stopping in Platform Framing

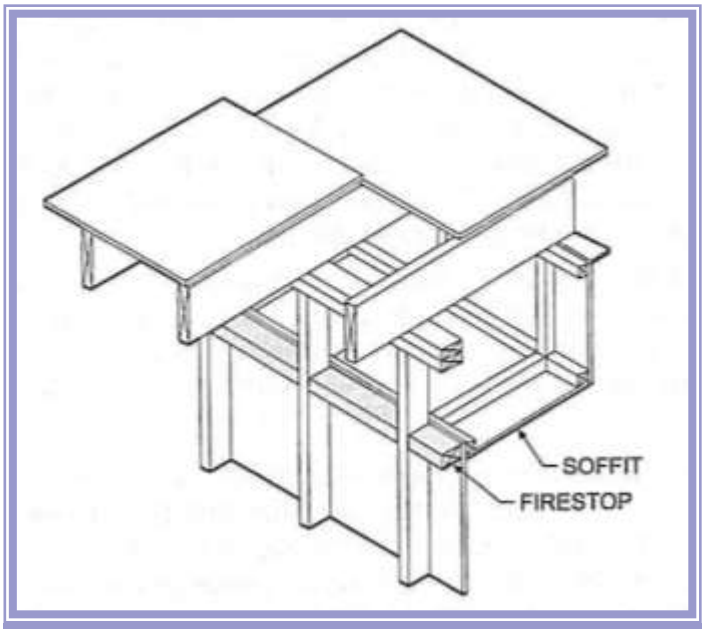

Figure R302.11(3) - Fire Stopping in a Furred Soffit

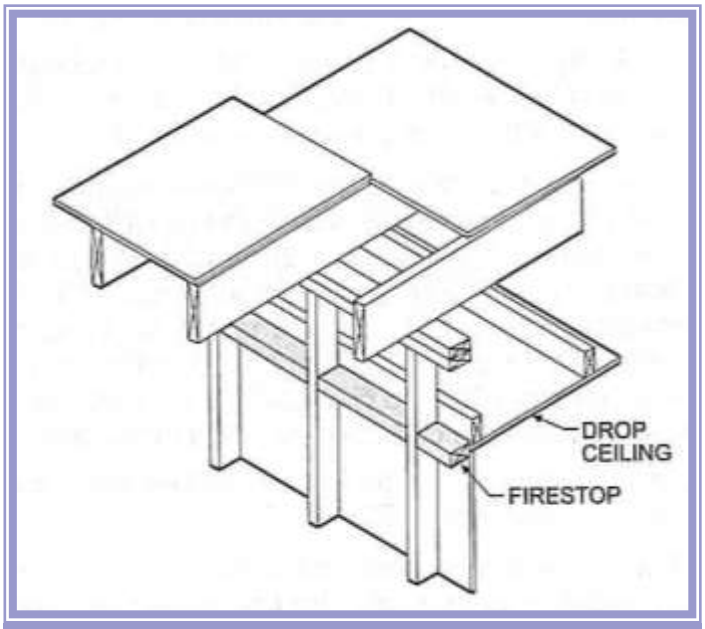

Figure R302.11(4) - Fire Stopping in a Drop Ceiling

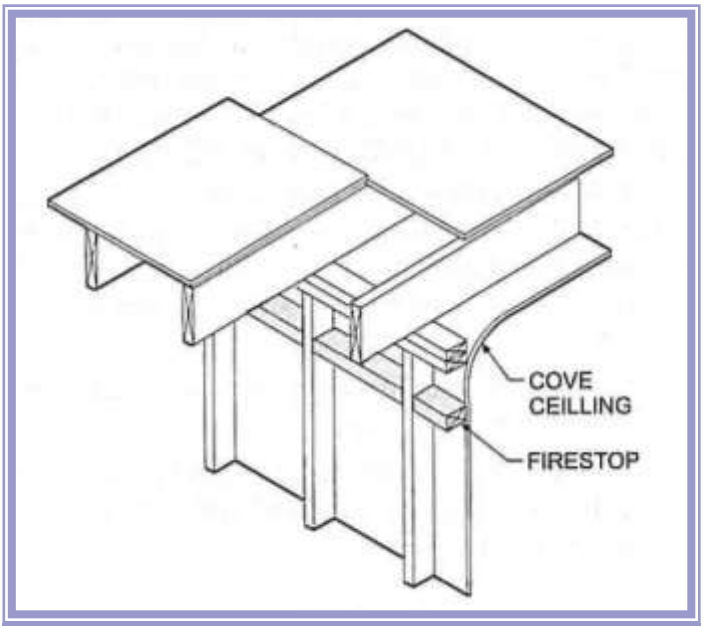

Figure R302.11(5) - Fire Stopping in a Cove Ceiling

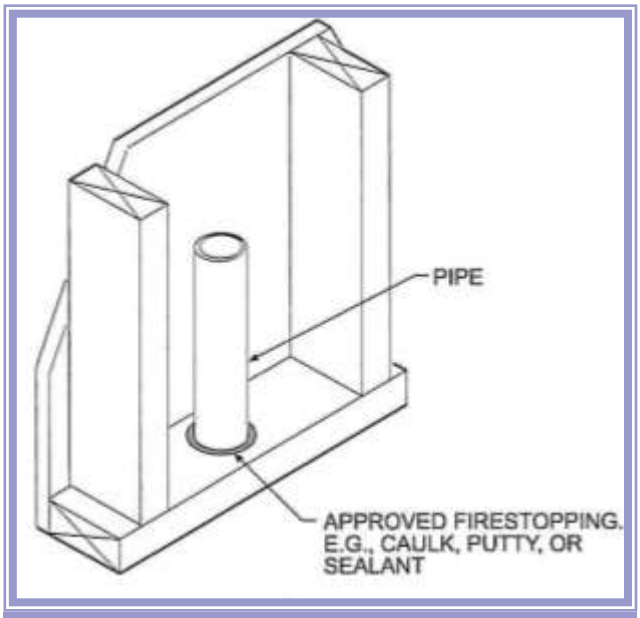

Figure R302.11(8) - Fire Stopping Around Pipes

Draft Stopping

Draft stopping (R302.12): In combustible construction where there is usable space both above and below the concealed space of a floor/ceiling assembly, draft stops shall be installed so that the area of the concealed space does not exceed 1,000 square feet. Draft stopping shall divide the concealed space into approximately equal areas. Where the assembly is enclosed by a floor membrane above and a ceiling membrane below, draft stopping shall be provided in floor/ceiling assemblies under the following circumstances:

1. Ceiling is suspended under the floor framing.
2. Floor framing is constructed of truss-type open-web or perforated members.

Materials (R302.12.1): Draft stopping materials shall not be less than $^{1}/_{2}$-inch gypsum board, $^{3}/_{8}$-inch wood structural panels or other approved materials adequately supported. Draft stopping shall be installed parallel to the floor framing members unless otherwise approved by the building official. The integrity of the draft stops shall be maintained.

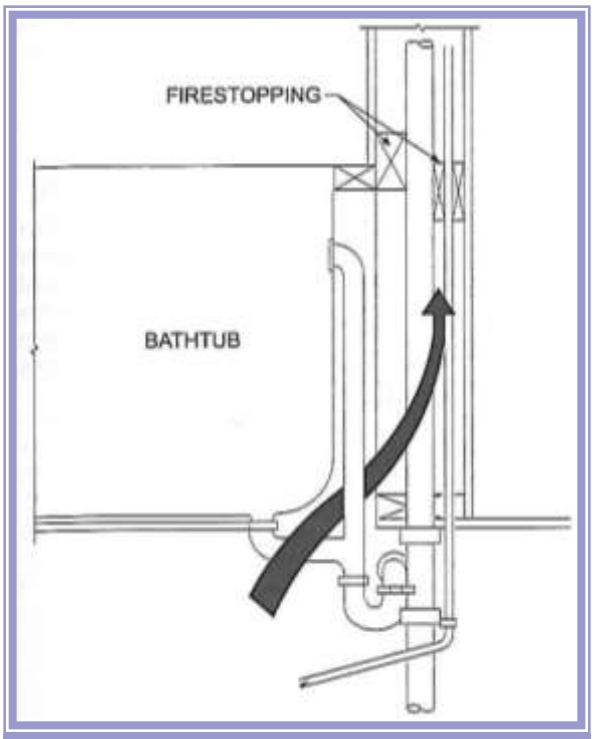

Figure R302.11(6) - Fire Stopping at Tubs

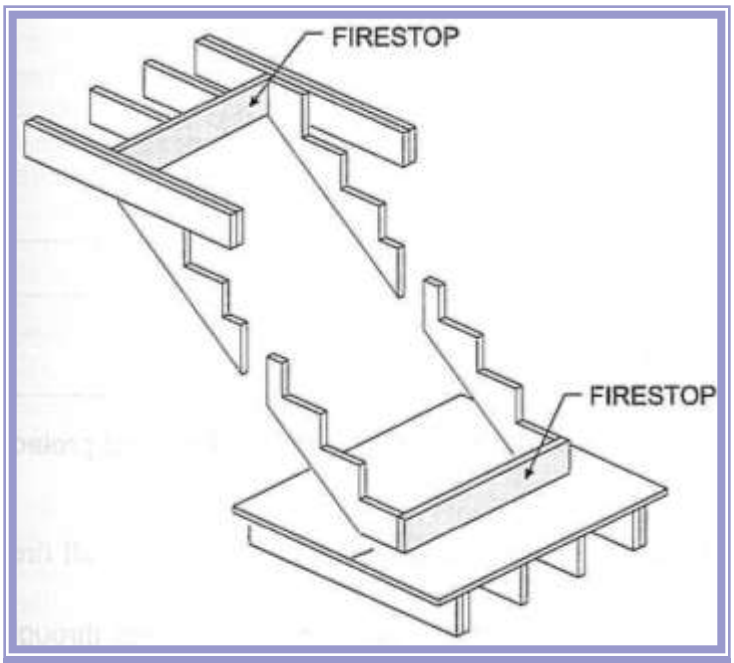

Figure R302.11(7) - Fire Stopping at Stairways

Combustible insulation clearance (R302.13): Combustible insulation shall be separated a minimum of 3 inches from recessed luminaires, fan motors and other heat-producing devices.

Exception: Where heat-producing devices are listed for lesser clearances, combustible insulation complying with the listing requirements shall be separated in accordance with the conditions stipulated in the listing. Recessed luminaires installed in the building thermal envelope shall meet the requirements of Section N1102.4.4 of this code.

Ceiling and Roof

Refer to **Table R802.4(2) Ceiling Joist With Attic Storage Span Chart**, **Table R802.4(1) Ceiling Joist Without Attic Storage Span Chart**, **Table R802.5.1(2) Rafter Span Chart With Ceiling Attached**, **Table R802.5.1(1) Rafter Span Chart Without Ceiling Attached** and **Table R602.3(1) Fastener Schedule for Structural Members** for additional details and requirements

Ceiling joist and rafter spans must be in compliance with applicable International Residential Code span tables. Complex and unusual room and roof configurations make it difficult to apply a simple span table in evaluation of member size requirements. Extreme care must be exercised in this determination.

New concepts in ceiling design have brought about new configurations in framing methods and introduced assemblies such as stiffbacks, a-frames and trusses to enable the new concepts in ceiling design to be accomplished. Some of these designs are so complex that it is necessary to consult with an engineer to insure structural integrity.

Identification (R802.1): Load-bearing dimension lumber for rafters, trusses and ceiling joists shall be identified by a grade mark of a lumber grading or inspection agency that has been approved by an accreditation body that complies with DOC PS 20. In lieu of a grade mark, a certificate of inspection issued by a lumber grading or inspection agency meeting the requirements of this section shall be accepted.

Truss design drawings (R802.10.1): Truss design drawings, prepared in conformance to Section R802.10.1, shall be provided to the building official and approved prior to installation. Truss design drawings shall be provided with the shipment of trusses delivered to the jobsite. Truss design drawings shall include, at a minimum, the information specified below.

1. Slope or depth, span and spacing.
2. Location of all joints.
3. Required bearing widths.

4. Design loads as applicable.
   a. Top chord live load (as determined from Section R301.6).
   b. Top chord dead load.
   c. Bottom chord live load.
   d. Bottom chord dead load.
   e. Concentrated loads and their points of application.
   f. Controlling wind and earthquake loads.
5. Adjustments to lumber and joint connector design values for conditions of use.
6. Each reaction force and direction.
7. Joint connector type and description (e.g., size, thickness or gage) and the dimensioned location of each joint connector except where symmetrically located relative to the joint interface.
8. Lumber size, species and grade for each member.
9. Connection requirements for:
   a. Truss to girder-truss.
   b. Truss ply to ply.
   c. Field splices.
10. Calculated deflection ratio and/or maximum description for live and total load.
11. Maximum axial compression forces in the truss members to enable the building designer to design the size, connections and anchorage of the permanent continuous lateral bracing. Forces shall be shown on the truss design drawing or on supplemental documents.
12. Required permanent truss member bracing location.

Ceiling joist and rafter connections (R802.3.1): Ceiling joists and rafters shall be nailed to each other in accordance with Table R802.5.1(9), and the rafter shall be nailed to the top wall plate in accordance with Table R602.3(1). Ceiling joists shall be continuous or securely joined in accordance with Table R802.5.1(9) where they meet over interior partitions and are nailed to adjacent rafters to provide a continuous tie across the building when such joists are parallel to the rafters.

Where ceiling joists are not connected to the rafters at the top wall plate, joists connected higher in the attic shall be installed as rafter ties, or rafter ties shall be installed to provide a continuous tie. Where ceiling joists are not parallel to rafters, rafter ties shall be installed. Rafter ties shall be a minimum of 2 inches by 4 inches (nominal), installed in accordance with the connection requirements in Table R802.5.1(9), or connections of equivalent capacities shall be provided. Where ceiling joists or rafter ties are not provided, the ridge formed by these rafters shall be supported by a wall or girder designed in accordance with accepted engineering practice.

Collar ties or ridge straps to resist wind uplift shall be connected in the upper third of the attic space in accordance with Table R602.3(1). Collar ties shall be a minimum of 1 inch by 4 inches (nominal), spaced not more than 4 feet on center.

Ceiling joists lapped (R802.3.2): Ends of ceiling joists shall be lapped a minimum of 3 inches or butted over bearing partitions or beams and toenailed to the bearing member. Where ceiling joists are used to provide resistance to rafter thrust, lapped joists shall be nailed together in accordance with Table R802.5.1(9) and butted joists shall be tied together in a manner to resist such thrust. Joists that do not resist thrust shall be permitted to be nailed in accordance with Table R602.3(1).

Bearing (R802.6): The ends of each rafter or ceiling joist shall have not less than 1 ½ inches of bearing on wood or metal and not less than 3 inches on masonry or concrete. The bearing on masonry or concrete shall be direct, or a sill plate of 2-inch minimum nominal thickness shall be provided under the rafter or ceiling joist. The sill plate shall provide a minimum nominal bearing area of 48 square inches.

Cutting, drilling and notching (R802.7): Structural roof members shall not be cut, bored or notched in excess of the limitations specified in this section.

Sawn lumber (R802.7.1): Cuts, notches, and holes in solid lumber joists, rafters, blocking and beams shall comply with the provisions of R502.8.1 except that cantilevered portions of rafters shall be permitted in accordance with Section R802.7.1.1.

Cantilevered portions of rafters (R802.7.1.1): Notches on cantilevered portions of rafters are permitted provided the dimension of the remaining portion of the rafter is not less than 3 ½ inches and the length of the cantilever does not exceed 24 inches in accordance with Figure R802.7.1.1.

Ceiling joist taper cut (R802.7.1.2): Taper cuts at the ends of the ceiling joist shall not exceed one-fourth the depth of the member in accordance with Figure R802.7.1.2.

Engineered wood products (R802.7.2): Cuts, notches and holes bored in trusses, structural composite lumber, structural glue -laminated members or I-joists are prohibited except where permitted by the manufacturer's recommendations or where the effects of such alterations are specifically considered in the design of the member by a registered design professional.

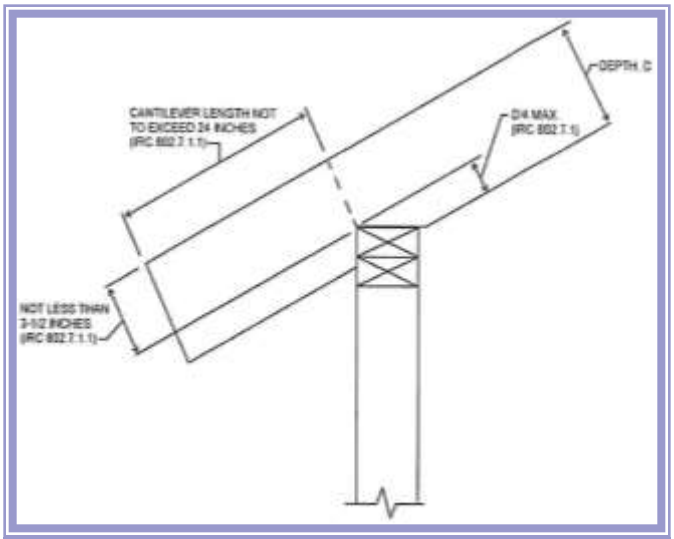

Figure R802.7.1.1—Rafter Notch

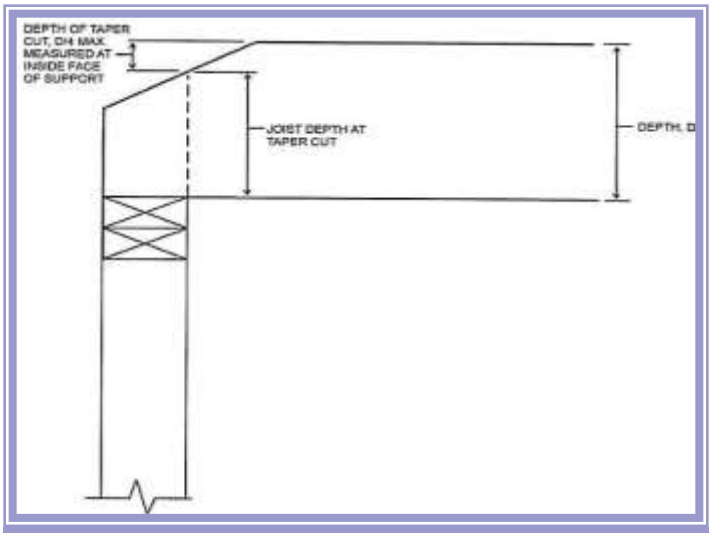

Figure R802.7.1.2—Ceiling Joist Taper Cut

Framing details (R802.3): Rafters shall be framed to ridge board or to each other with a gusset plate as a tie. Ridge board shall be at least 1-inch nominal thickness and not less in depth than the cut end of the rafter. At all valleys and hips there shall be a valley or hip rafter not less than 2-inch nominal thickness and not less in depth than the cut end of the rafter. Hip and valley rafters shall be supported at the ridge by a brace to a bearing partition or be designed to carry and distribute the specific load at that point. Where the roof pitch is less than three units vertical in 12 units horizontal (25-percent slope), structural members that support rafters and ceiling joists, such as ridge beams, hips and valleys, shall be designed as beams..

Bridging (R802.8.1): Rafters and ceiling joists having a depth-to-thickness ratio exceeding 6 to 1 based on nominal dimensions shall be supported laterally by solid blocking, diagonal bridging (wood or metal) or a continuous 1-inch by 3-inch wood strip nailed across the rafters or ceiling joists at intervals not exceeding 8 feet.

Uplift resistance (R802.11.1): Roof assemblies shall have uplift resistance in accordance with Sections R802.11.1.2 and R802.11.1.3. Where the uplift force does not exceed 200 pounds, rafters and trusses spaced not more than 24 inches on center shall be permitted to be attached to their supporting wall assemblies in accordance with Table R602.3(1). Where the basic wind speed does not exceed 90 mph, the wind exposure category is B, the roof pitch is 5:12 or greater, and the roof span is 32 feet or less, rafters and trusses spaced not more than 24 inches on center shall be permitted to be attached to their supporting wall assemblies in accordance with Table R602.3(1).

Truss uplift resistance (R802.11.1.2): Trusses shall be attached to supporting wall assemblies by connections capable of resisting uplift forces as specified on the truss design drawings. Uplift forces shall be permitted to be determined as specified by Table R802.11, if applicable, or as determined by accepted engineering practice.

Rafter uplift resistance (R802.11.1.3): Individual rafters shall be attached to supporting wall assemblies by connections capable of resisting uplift forces as determined by Table R802.11 or as determined by accepted engineering practice. Connections for beams used in a roof system shall be designed in accordance with accepted engineering practice.

Table R802.5.1(9) - Rafter/Ceiling Joist Heel Connections [a, b, c, d, e, f, h]

Rafter Slope	Rafter Spacing (inches)	Ground Snow Load (psf)															
		20 [g]				30				50				70			
		Roof span (feet)															
		12	20	28	36	12	20	28	36	12	20	28	36	12	20	28	36
		Required Number of 16d Common Nails [a, b] per Heel Joint Splices [c, d, e, f]															
3:12	12	4	6	8	10	4	6	8	11	5	8	12	15	6	11	15	20
	16	5	8	10	13	5	8	11	14	6	11	15	20	8	14	20	26
	24	7	11	15	19	7	11	16	21	9	16	23	30	12	21	30	39
4:12	12	3	5	6	8	3	5	6	8	4	6	9	11	5	8	12	15
	16	4	6	8	10	4	6	8	11	5	8	12	15	6	11	15	20
	24	5	8	12	15	5	9	12	16	7	12	17	22	9	16	23	29
5:12	12	3	4	5	6	3	4	5	7	3	5	7	9	4	7	9	12
	16	3	5	6	8	3	5	7	9	4	7	9	12	5	9	12	16
	24	4	7	9	12	4	7	10	13	6	10	14	18	7	13	18	23
7:12	12	3	4	4	5	3	3	4	5	3	4	5	7	3	5	7	9
	16	3	4	5	6	3	4	5	6	3	5	7	9	4	6	9	11
	24	3	5	7	9	3	5	7	9	4	7	10	13	5	9	13	17
9:12	12	3	3	4	4	3	3	3	4	3	3	4	5	3	4	5	7
	16	3	4	4	5	3	3	4	5	3	4	5	7	3	5	7	9
	24	3	4	6	7	3	4	6	7	3	6	8	10	4	7	10	13
12:12	12	3	3	3	3	3	3	3	3	3	3	3	4	3	3	4	5
	16	3	3	4	4	3	3	3	4	3	3	4	5	3	4	5	7
	24	3	4	4	5	3	3	4	6	3	4	6	8	3	6	8	10

a. 40d box nails shall be permitted to be substituted for 16d common nails.

b. Nailing requirements shall be permitted to be reduced 25 percent if nails are clinched.

c. Heel joint connections are not required when the ridge is supported by a load-bearing wall, header or ridge beam.

d. When intermediate support of the rafter is provided by vertical struts or purlins to a load-bearing wall, the tabulated heel joint connection requirements shall be permitted to be reduced proportionally to the reduction in span.

e. Equivalent nailing patterns are required for ceiling joist to ceiling joist lap splices.

f. When rafter ties are substituted for ceiling joists, the heel joint connection requirement shall be taken as the tabulated heel joint connection requirement for two-thirds of the actual rafter slope.

g. Applies to roof live load of 20 psf or less.

h. Tabulated heel joint connection requirements assume that ceiling joists or rafter ties are located at the bottom of the attic space. When ceiling joists or rafter ties are located higher in the attic, heel joint connection requirements shall be increased by the following factors:

HC/HR	Heel Joint Connection Adjustment Factor
1/3	1.5
1/4	1.33
1/5	1.25
1/6	1.2
1/10 or less	1.11

where: ..... HC = Height of ceiling joists or rafter ties measured vertically above the top of the rafter support walls.

..... HR = Height of roof ridge measured vertically above the top of the rafter support walls

Table R802.11 Rafter or Truss Uplift Connection Forces from Wind (pounds per connection) [a, b, c, d, e, f, g, h]

Rafter or Truss Spacing	Roof Span (feet)	Exposure B							
		Basic Wind Speed (mph)							
		85		90		100		110	
		< 5:12	≥ 5:12	< 5:12	≥ 5:12	< 5:12	≥ 5:12	< 5:12	≥ 5:12
12" O.C.	12	47	41	62	54	93	81	127	110
	18	59	51	78	68	119	104	165	144
	24	70	61	93	81	145	126	202	176
	28	77	67	104	90	163	142	227	197
	32	85	74	115	100	180	157	252	219
	36	93	81	126	110	198	172	277	241
	42	105	91	143	124	225	196	315	274
	48	116	101	159	138	251	218	353	307
16" O.C.	12	63	55	83	72	124	108	169	147
	18	78	68	103	90	159	138	219	191
	24	93	81	124	108	193	168	269	234
	28	102	89	138	120	217	189	302	263
	32	113	98	153	133	239	208	335	291
	36	124	108	168	146	264	230	369	321
	42	139	121	190	165	299	260	420	365
	48	155	135	212	184	335	291	471	410
24" O.C.	12	94	82	124	108	186	162	254	221
	18	117	102	155	135	238	207	329	286
	24	140	122	186	162	290	252	404	351
	28	154	134	208	181	326	284	454	395
	32	170	148	230	200	360	313	504	438
	36	186	162	252	219	396	345	554	482
	42	209	182	285	248	449	391	630	548
	48	232	202	318	277	502	437	706	614

a. The uplift connection forces are based on a maximum 33-foot mean roof height and Wind Exposure Category B or C. For Exposure D, the uplift connection force shall be selected from the Exposure C portion of the table using the next highest tabulated basic wind speed. The Adjustment Coefficients in Table R301.2(3) shall not be used to multiply the above forces for Exposures C and D or for other mean roof heights.

b. The uplift connection forces include an allowance for roof and ceiling assembly dead load of 15 psf.

c. The tabulated uplift connection forces are limited to a maximum roof overhang of 24 inches.

d. The tabulated uplift connection forces shall be permitted to be multiplied by 0.75 for connections not located within 8 feet of building corners.

e. For buildings with hip roofs with 5:12 and greater pitch, the tabulated uplift connection forces shall be permitted to be multiplied by 0.70. This reduction shall not be combined with any other reduction in tabulated forces.

f. For wall-to-wall and wall-to-foundation connections, the uplift connection force shall be permitted to be reduced by 60 plf for each full wall above.

g. Linear interpolation between tabulated roof spans and wind speeds shall be permitted.

h. The tabulated forces for a 12-inch on-center spacing shall be permitted to be used to determine the uplift load in pounds per linear foot.

Purlins

Refer to **Table R802.5.1(4) Rafter Span Chart With Ceiling Attached** and **Table R802.5.1(3) Rafter Span Chart Without Ceiling Attached** for additional details and requirements.

Purlins (R802.5.1): Installation of purlins to reduce the span of rafters is permitted as shown in Figure R802.5.1. Purlins shall be sized no less than the required size of the rafters that they support. Purlins shall be continuous and shall be supported by 2-inch by 4-inch braces installed to bearing walls at a slope not less than 45 degrees from the horizontal. The braces shall be spaced not more than 4 feet on center and the unbraced length of braces shall not exceed 8 feet.

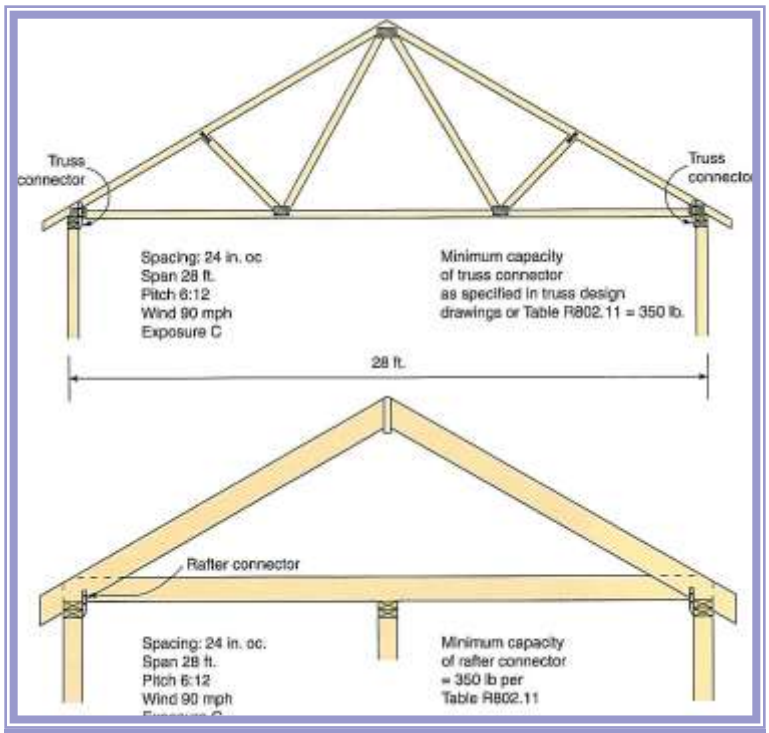

Rafter or Truss Connectors Required for Uplift Forces Greater Than 200 Pounds When Located in Wind Exposure Category C

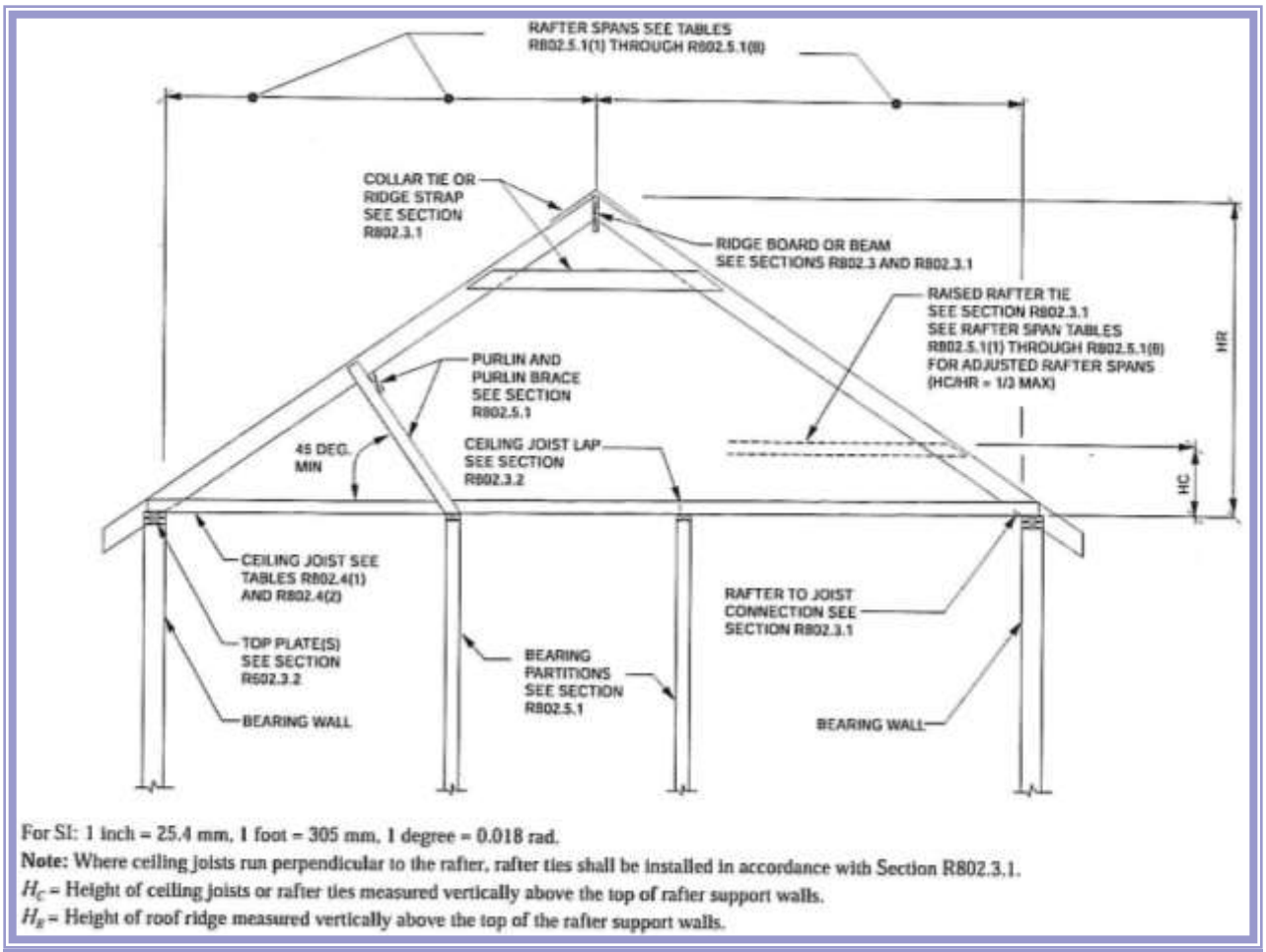

Figure R802.5.1—Braced Rafter Construction

Miscellaneous Requirements

Attic Ventilation

Ventilation required (R806.1): Enclosed attics and enclosed rafter spaces formed where ceilings are applied directly to the underside of roof rafters shall have cross ventilation for each separate space by ventilating openings protected against the entrance of rain or snow. Ventilation openings shall have a least dimension of $^{1}/_{16}$ inch minimum and ¼ inch maximum. Ventilation openings having a least dimension larger than ¼ inch shall be provided with corrosion-resistant wire cloth screening, hardware cloth, or similar material with openings having a least dimension of $^{1}/_{16}$ inch minimum and ¼ inch maximum.

Openings in roof framing members shall conform to the requirements of Section R802.7. Required ventilation openings shall open directly to the outside air.

Exception: Attic ventilation shall not be required when determined not necessary by the code official due to atmospheric or climatic conditions.

Minimum vent area (R806.2): The minimum net free ventilating area shall be $^{1}/_{150}$ of the area of the vented space.

Exception: The minimum net free ventilation area shall be $^{1}/_{300}$ of the vented space provided one or more of the following conditions are met:

1. In Climate Zones 6, 7 and 8, a Class I or II vapor retarder is installed on the warm-in-winter side of the ceiling.
2. At least 40 percent and not more than 50 percent of the required ventilating area is provided by ventilators located in the upper portion of the attic or rafter space. Upper ventilators shall be located no more than 3 feet below the ridge or highest point of the space, measured vertically, with the balance of the required ventilation provided by eave or cornice vents. Where the location of wall or roof framing members conflicts with the installation of upper ventilators, installation more than 3 feet below the ridge or highest point of the space shall be permitted.

Vent and insulation clearance (R806.3): Where eave or cornice vents are installed, insulation shall not block the free flow of air. A minimum of a 1-inch space shall be provided between the insulation and the roof sheathing and at the location of the vent.

Installation and weather protection (R806.4): Ventilators shall be installed in accordance with manufacturer's installation instructions. Installation of ventilators in roof systems shall be in accordance with the requirements of Section R903. Installation of ventilators in wall systems shall be in accordance with the requirements of Section R703.1.

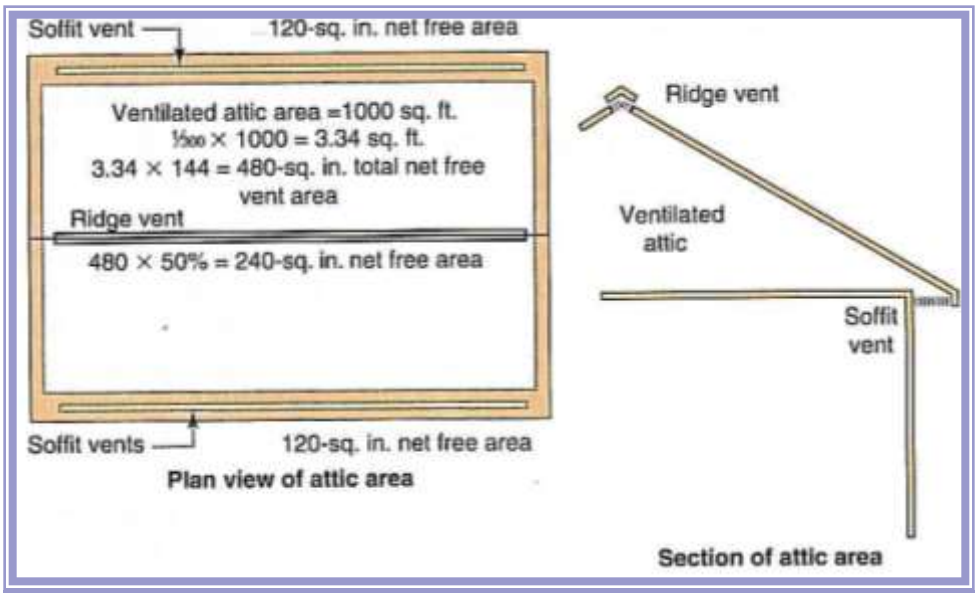

Roof Ventilation

Unvented Attic Assemblies (R806.5)

Unvented attic and unvented enclosed rafter assemblies (R806.5): Unvented attic assemblies (spaces between the ceiling joists of the top story and the roof rafters) and unvented enclosed rafter assemblies (spaces between ceilings that are applied directly to the underside of roof framing members/rafters and the structural roof sheathing at the top of the roof framing members/rafters) shall be permitted if all the following conditions are met:

1. The unvented attic space is completely contained within the building thermal envelope.
2. No interior Class I vapor retarders are installed on the ceiling side (attic floor) of the unvented attic assembly or on the ceiling side of the unvented enclosed rafter assembly.
3. Where wood shingles or shakes are used, a minimum ¼ inch vented air space separates the shingles or shakes and the roofing underlayment above the structural sheathing.
4. In Climate Zones 5, 6, 7 and 8, any air-impermeable insulation shall be a Class II vapor retarder, or shall have a Class III vapor retarder coating or covering in direct contact with the underside of the insulation.
5. Either Items 5.1, 5.2 or 5.3 shall be met, depending on the air permeability of the insulation directly under the structural roof sheathing.
   a. Air-impermeable insulation only. Insulation shall be applied in direct contact with the underside of the structural roof sheathing.
   b. Air-permeable insulation only. In addition to the air-permeable insulation installed directly below the structural sheathing, rigid board or sheet insulation shall be installed directly above the structural roof sheathing as specified in Table R806.5 for condensation control.
   c. Air-impermeable and air-permeable insulation. The air-impermeable insulation shall be applied in direct contact with the underside of the structural roof sheathing as specified in Table R806.5 for condensation control. The air-permeable insulation shall be installed directly under the air-impermeable insulation.
   d. Where preformed insulation board is used as the air-impermeable insulation layer, it shall be sealed at the perimeter of each individual sheet interior surface to form a continuous layer.

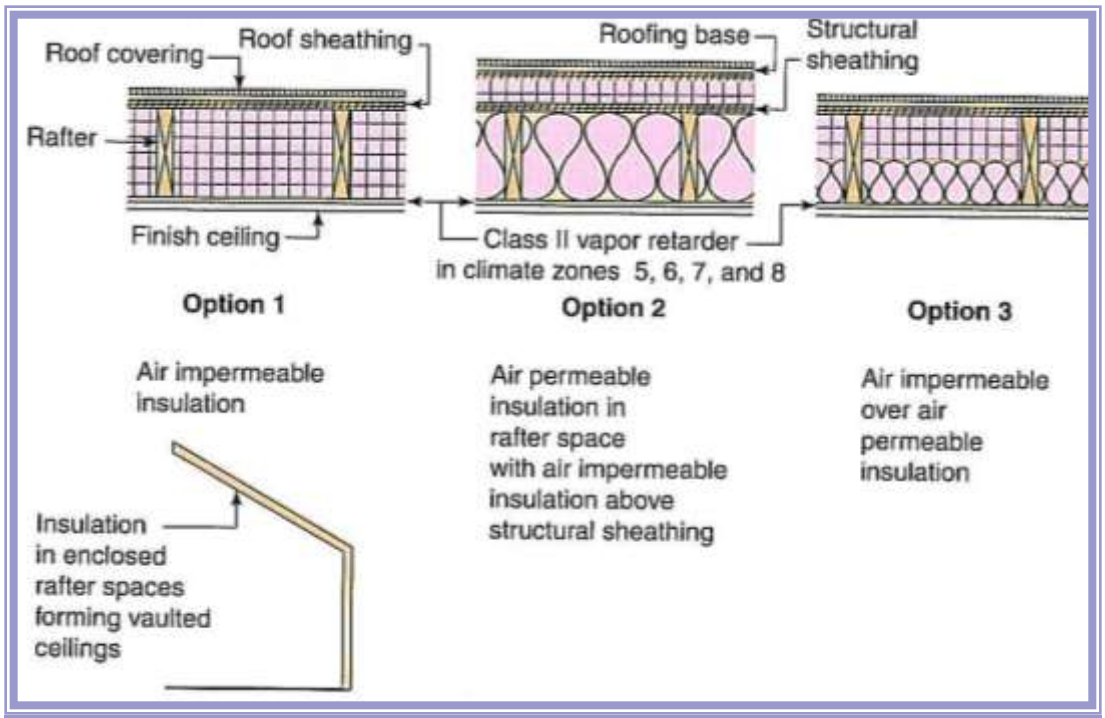

Unvented Enclosed Rafter Assemblies

Crawl Space

Ventilation (R408.1): The under-floor space between the bottom of the floor joists and the earth under any building (except space occupied by a basement) shall have ventilation openings through foundation walls or exterior walls. The minimum net area of ventilation openings shall not be less than 1 square foot for each 150 square feet of under-floor space area, unless the ground surface is covered by a Class 1 vapor retarder material. When a Class 1 vapor retarder material is used, the minimum net area of ventilation openings shall not be less than 1 square foot for each 1,500 square feet of under-floor space area. One such ventilating opening shall be within 3 feet of each corner of the building.

Openings for under-floor ventilation (R408.2): The minimum net area of ventilation openings shall not be less than 1 square foot for each 150 square feet of under-floor area. One ventilation opening shall be within 3 feet of each corner of the building. Ventilation openings shall be covered for their height and width with any of the following materials provided that the least dimension of the covering shall not exceed ¼ inch:

1. Perforated sheet metal plates not less than 0.070 inch thick.
2. Expanded sheet metal plates not less than 0.047 inch thick.
3. Cast-iron grill or grating.
4. Extruded load-bearing brick vents.
5. Hardware cloth of 0.035 inch wire or heavier.
6. Corrosion-resistant wire mesh, with the least dimension being $^{1}/_{8}$ inch thick.

Exception: The total area of ventilation openings shall be permitted to be reduced to $^{1}/_{1,500}$ of the under-floor area where the ground surface is covered with an approved Class I vapor retarder material and the required openings are placed to provide cross ventilation of the space. The installation of operable louvers shall not be prohibited.

Access (R408.4): Access shall be provided to all under-floor spaces. Access openings through the floor shall be a minimum of 18 inches by 24 inches. Openings through a perimeter wall shall be not less than 16 inches by 24 inches. When any portion of the through-wall access is below grade, an areaway not less than 16 inches by 24 inches shall be provided. The bottom of the areaway shall be below the threshold of the access opening. Through wall access openings shall not be located under a door to the residence. See Section M1305.1.4 for access requirements where mechanical equipment is located under floors.

Removal of debris (R408.5): The under-floor grade shall be cleaned of all vegetation and organic material. All wood forms used for placing concrete shall be removed before a building is occupied or used for any purpose. All construction materials shall be removed before a building is occupied or used for any purpose.

Attic Access

Attic access (R807.1): Buildings with combustible ceiling or roof construction shall have an attic access opening to attic areas that exceed 30 square feet and have a vertical height of 30 inches or greater. The vertical height shall be measured from the top of the ceiling framing members to the underside of the roof framing members.

The rough-framed opening shall not be less than 22 inches by 30 inches and shall be located in a hallway or other readily accessible location. When located in a wall, the opening shall be a minimum of 22 inches wide by 30 inches high wide. When the access is located in a ceiling, minimum unobstructed headroom in the attic space shall be 30 inches at some point above the access measured vertically from the bottom of ceiling framing members. See Section M1305.1.3 for access requirements where mechanical equipment is located in attics.

Attached Garages

Driveway Requirements **(City Ordinance Section 405.610)**

All residential dwelling driveways and off-street areas used for standing and maneuvering of vehicles shall be constructed of concrete or asphalt surface driveways and shall be designed to drain and avoid flow of water across sidewalks.

All residential dwelling driveways shall be at least sixteen (16) feet wide from the street or curb to the garage or dwelling unit.

All residential dwellings located on a street classified as a collector or greater, shall provide an internal vehicle turn-around or a circle driveway, so as to provide an alternative to backing out onto the street.

All new driveways, curb cuts and driveway expansions shall be reviewed for drainage impacts, grade changes, and potential access restrictions by the City.

Off-Street Parking

All residential dwelling units are to provide a minimum of two parking spaces for each dwelling unit constructed. Driveways constructed for single-family and two-family uses shall reserve parking area for a minimum of two vehicles, in addition to garages or carports.

All multi-family dwelling units shall provide parking spaces and handicap parking design shall comply with the latest adopted building codes and shall furthermore comply with the standards elsewhere in Article VI.

Parking areas reserved for private homeowners association playgrounds, pools, parks, etc. shall provide one parking space for each ten dwelling units serviced by the common area. Parking design shall comply with the latest adopted building codes.

Garage Floor

The area of the floor used for parking vehicles shall be sloped to facilitate the movement of liquids toward the main entry doorway.

Dwelling/garage opening/penetration protection (R302.5): Openings and penetrations through the walls or ceilings separating the dwelling from the garage shall be in accordance with Sections R302.5.1 through R302.5.3.

Opening protection (R302.5.1): Openings from a private garage directly into a room used for sleeping purposes shall not be permitted. Other openings between the garage and residence shall be equipped with solid wood doors not less than 1 3/8 inches in thickness, solid or honeycomb-core steel doors not less than 1 $^{3}/_{8}$ inches thick, or 20-minute fire-rated doors, equipped with a self-closing device.

Duct penetration (R302.5.2): Ducts in the garage and ducts penetrating the walls or ceilings separating the dwelling from the garage shall be constructed of a minimum No. 26 gage sheet steel or other approved material and shall have no openings into the garage.

Other penetrations (R302.5.3): Penetrations through the separation required in Section R302.6 shall be protected as required by Section R302.11, Item 4.

Dwelling/garage fire separation (R302.6): The garage shall be separated as required by Table R302.6. Openings in garage walls shall comply with Section R302.5. This provision does not apply to garage walls that are perpendicular to the adjacent dwelling unit wall.

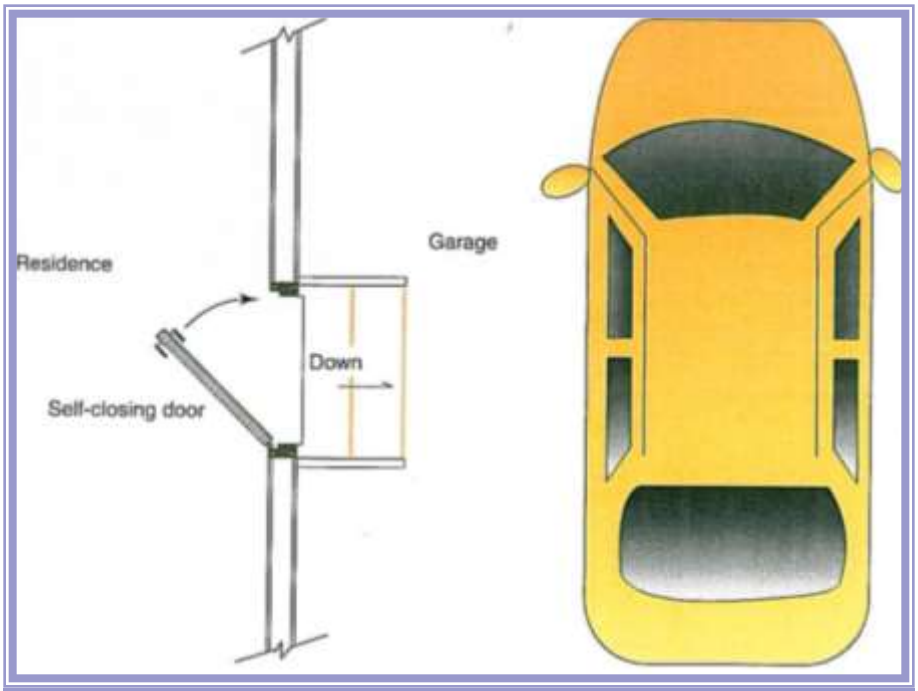

The Door Between a House and a Garage is Required to be Self-Closing

Table R302.6—Dwelling/Garage Separation	
Separation	**Material**
From the residence and attics	Not less than ½ inch gypsum board or equivalent applied to the garage side
From all habitable rooms above the garage	Not less than $^{5}/_{8}$ inch Type X gypsum board or equivalent
Structure(s) supporting floor/ceiling assemblies used for separation required by this section	Not less than ½ inch gypsum board or equivalent
Garages located less than 3 feet from a dwelling unit on the same lot	Not less than ½ inch gypsum board or equivalent applied to the interior side of exterior walls that are within this area

Decks

Live loads, girder, and joists spans for decks are the same as for dwelling units. Refer to **Deck Guideline** for additional details and requirements.

Deck ledger connection to band joist (R507.2): For decks supporting a total design load of 50 pounds per square foot [40 pounds per square foot live load plus 10 pounds per square foot dead load], the connection between a deck ledger of pressure-preservative-treated Southern Pine, incised pressure-preservative-treated Hem-Fir or approved decay-resistant species, and a 2-inch nominal lumber band joist bearing on a sill plate or wall plate shall be constructed with ½ inch lag screws or bolts with washers in accordance with Table R507.2. Lag screws, bolts and washers shall be hot-dipped galvanized or stainless steel.

Placement of lag screws or bolts in deck ledgers and band joists (R507.2.1): The lag screws or bolts in deck ledgers and band joists shall be placed in accordance with Table R507.2.1 and Figures R507.2.1(1) and R507.2.1(2).

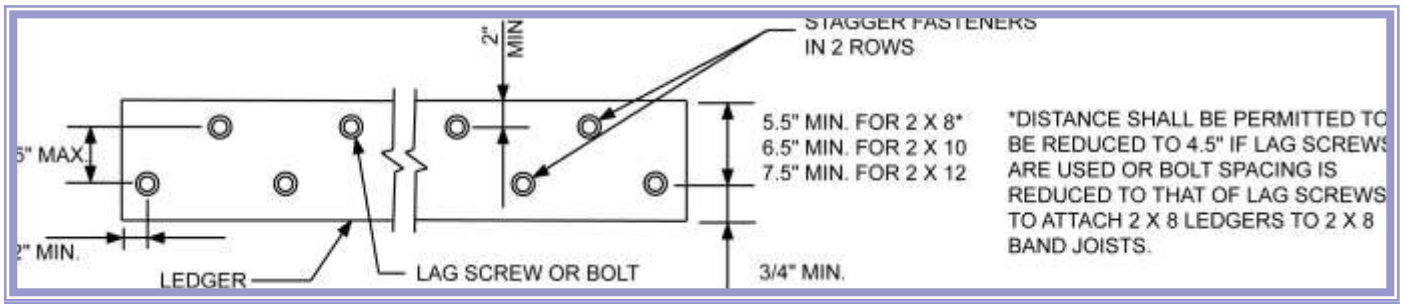

Figure R507.2.1(1) - Placement of Lag Screws and Bolts in Ledgers

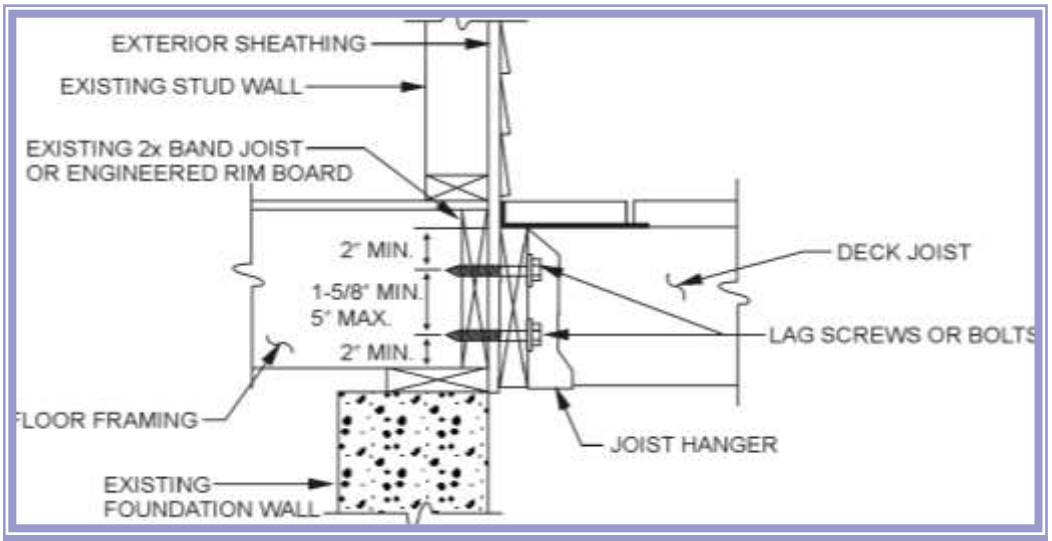

Figure R507.2.1(2) - Placement of Lag Screws and Bolts in Band Joists

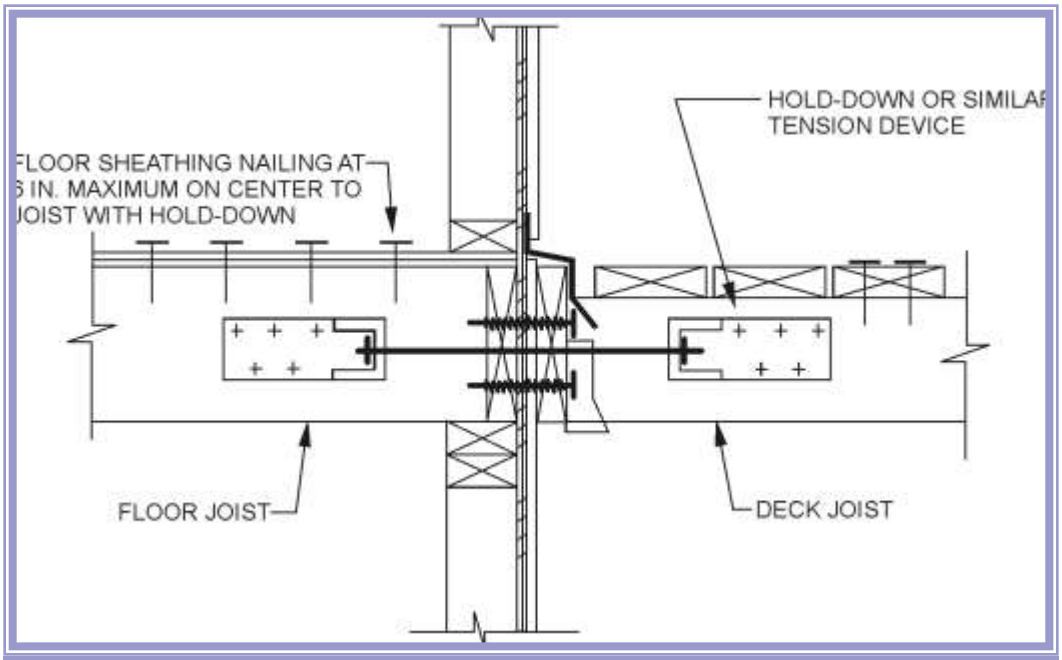

Figure R507.2.3—Deck Attachment for Lateral Loads

Table R507.2—Fastener Spacing for a Southern Pine or Hem—Fir Deck Ledger and a Nominal 2 Inch Solid Sawn Spruce—Pine—Fir Band Joist[c, f, g] (Deck Live Load = 40 PSF, Deck Deaad Load = 10 PSF)

Joist Span	6' and less	6'1" to 8'	8'1" to 10'	10'1" to 12'	12'1" to14'	14'1" to 16'	16'1" to 18'
Connection Details	On-Center Spacing of Fasteners						
½ " diameter lag screw with $^{15}/_{32}$" maximum sheathing [a]	30	23	18	15	13	11	10
½" diameter bolt with $^{15}/_{32}$" maximum sheathing	36	36	34	29	24	21	19
½" diameter bolt with $^{15}/_{32}$" maximum sheathing and ½" stacked washers [b, h]	36	36	29	24	21	18	16

a. The tip of the lag screw shall fully extend beyond the inside face of the band joist.

b. The maximum gap between the face of the ledger board and face of the wall sheathing shall be 1/2 inch.

c. Ledgers shall be flashed to prevent water from contacting the house band joist.

d. Lag screws and bolts shall be staggered in accordance with Section R507.2.1.

e. Deck ledger shall be minimum 2 × 8 pressure-preservative-treated No. 2 grade lumber, or other approved materials as established by standard engineering practice.

f. When solid-sawn pressure-preservative-treated deck ledgers are attached to a minimum 1-inch-thick engineered wood product (structural composite lumber, laminated veneer lumber or wood structural panel band joist), the ledger attachment shall be designed in accordance with accepted engineering practice.

g. A minimum 1 × 91/2 Douglas Fir laminated veneer lumber rim board shall be permitted in lieu of the 2-inch nominal band joist.

h. Wood structural panel sheathing, gypsum board sheathing or foam sheathing not exceeding 1 inch in thickness shall be permitted. The maximum distance between the face of the ledger board and the face of the band joist shall be 1 inch.

Table R507.2.1—Placement of Lag Screws and Bolts in Deck Ledgers and Band Joists

Minimum End and Edge Distances and Spacing Between Rows				
	Top Edge	Bottom Edge	Ends	Row Spacing
Ledger [a]	2 inches [d]	¼ inch	2 inches [b]	1 $^{5}/_{8}$ inches [b]
Band Joist [c]	¾ inch	2 inches	2 inches [b]	1 $^{5}/_{8}$ inches [b]

a. Lag screws or bolts shall be staggered from the top to the bottom along the horizontal run of the deck ledger in accordance with Figure R507.2.1(1).

b. Maximum 5 inches.

c. For engineered rim joists, the manufacturer's recommendations shall govern.

d. The minimum distance from bottom row of lag screws or bolts to the top edge of the ledger shall be in accordance with Figure R507.2.1(1).

Bathroom Ventilation

Bathrooms (R303.3): Bathrooms, water closet compartments and other similar rooms shall be provided with aggregate glazing area in windows of not less than 3 square feet, one-half of which must be operable. Exception: The glazed areas shall not be required where artificial light and a local exhaust system are provided. The minimum local exhaust rates shall be determined in accordance with Section M1507. Exhaust air from the space shall be exhausted directly to the outdoors.

Outdoor discharge (M1501.1): The air removed by every mechanical exhaust system shall be discharged to the outdoors in accordance with Section M1506.2. Air shall not be exhausted into an attic, soffit, ridge vent or crawl space.

Clothes Dryer Exhaust

General (M1502.1): Clothes dryers shall be exhausted in accordance with the manufacturer's instructions.

Independent exhaust systems (M1502.2): Dryer exhaust systems shall be independent of all other systems and shall convey the moisture to the outdoors.

Exception: This section shall not apply to listed and labeled condensing (ductless) clothes dryers.

Duct termination (M1502.3): Exhaust ducts shall terminate on the outside of the building. Exhaust duct terminations shall be in accordance with the dryer manufacturer's installation instructions. If the manufacturer's instructions do not specify a termination location, the exhaust duct shall terminate not less than 3 feet in any direction from openings into buildings. Exhaust duct terminations shall be equipped with a backdraft damper. Screens shall not be installed at the duct termination.

Dryer exhaust ducts (M1502.4): Dryer exhaust ducts shall conform to the requirements of Sections M1502.4.1 through M1502.4.6.

Material and size (M1502.4.1): Exhaust ducts shall have a smooth interior finish and be constructed of metal having a minimum thickness of 0.0157 inches (No. 28 gauge). The duct shall be 4 inches nominal in diameter.

Duct installation (M1502.4.2): Exhaust ducts shall be supported at intervals not to exceed 12 feet and shall be secured in place. The insert end of the duct shall extend into the adjoining duct or fitting in the direction of airflow. Exhaust duct joints shall be sealed in accordance with Section M1601.4.1 and shall be mechanically fastened. Ducts shall not be joined with screws or similar fasteners that protrude more than $^{1}/_{8}$ inch into the inside of the duct.

Duct length (M1502.4.4): The maximum allowable exhaust duct length shall be determined by one of the methods specified in Section M1502.4.4.1 or M1502.4.4.2.

Specified length (M1502.4.4.1): The maximum length of the exhaust duct shall be 35 feet from the connection to the transition duct from the dryer to the outlet terminal. Where fittings are used, the maximum length of the exhaust duct shall be reduced in accordance with Table M1502.4.4.1. The maximum length of the exhaust duct does not include the transition duct.

Manufacturer's instructions (M1502.4.4.2): The size and maximum length of the exhaust duct shall be determined by the dryer manufacturer's installation instructions. The code official shall be provided with a copy of the installation instructions for the make and model of the dryer at the concealment inspection. In the absence of fitting equivalent length calculations from the clothes dryer manufacturer, Table M1502.4.4.1 shall be used.

Table M1502.4.4.1—Dryer Exhaust Duct Fitting Equivalent Lengths

Dryer Exhaust Duct Fitting Type	Equivalent Length
4 inch radius mitered 45° elbow	2 feet 6 inches
4 inch radius mitered 90° elbow	5 feet
6 inch radius smooth 45° elbow	1 foot
6 inch radius smooth 90° elbow	1 foot 9 inches
8 inch radius smooth 45° elbow	1 foot
8 inch radius smooth 90° elbow	1 foot 7 inches
10 inch radius smooth 45° elbow	9 inches
10 inch radius smooth 90° elbow	1 foot 6 inches

Protection required (M1502.5): Protective shield plates shall be placed where nails or screws from finish or other work are likely to penetrate the clothes dryer exhaust duct. Shield plates shall be placed on the finished face of all framing members where there is less than 1 ¼ inches between the duct and the finished face of the framing member. Protective shield plates shall be constructed of steel, shall have a minimum thickness of 0.062-inch and shall extend a minimum of 2 inches above sole plates and below top plates.

Makeup air (G2439.4): Installations exhausting more than 200 cfm shall be provided with makeup air. Where a closet is designed for the installation of a clothes dryer, an opening having an area of not less than 100 square inches for makeup air shall be provided in the closet enclosure, or makeup air shall be provided by other approved means.

Zero Lot Line Dwellings

Zero lot line dwellings, also known as townhouses, duplexes and patio homes, have yards that are part of the real estate and are owned by the dwelling owner. Each townhouse, duplex or patio home shall be considered a separate building and separated by common walls meeting the requirements of the following:

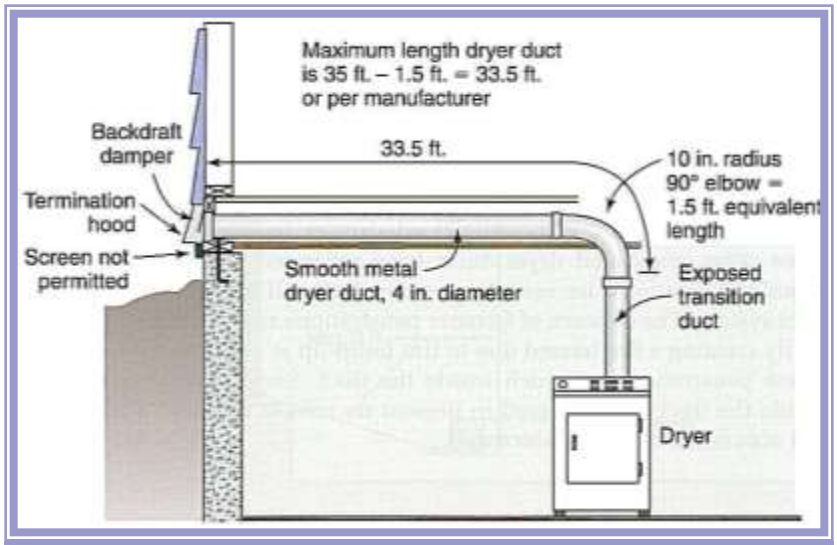

Specified Length of Clothes Dryer Exhaust Duct

Fire Resistant Construction

Townhouses (R302): Each townhouse shall be considered a separate building and shall be separated by fire-resistance-rated wall assemblies meeting the requirements of Section R302.1 for exterior walls and City Ordinance Section 205.080 for common walls. The common wall shall be a two (2) hour concrete masonry fire partition wall from the top of the concrete footing continuously up to the underside of the roof decking material. The roof decking material shall be fire-retardant-treated wood for a distance of four (4) feet on each side of the wall with no penetrations through the sheathing.

Continuity (R302.2.1): The fire-resistance-rated wall or assembly separating townhouses shall be continuous from the foundation to the underside of the roof sheathing, deck or slab. The fire-resistance rating shall extend the full length of the wall or assembly, including wall extensions through and separating attached enclosed accessory structures.

Per City Ordinance Section 205.080, the fire wall shall be labeled under the floor and in the attic area, in letters at least two (2) inches in height, stating “FIRE WALL: DO NOT PENETRATE OR DAMAGE” “No Penetrar O Dañar esta Pared Resistente al Fuego”.

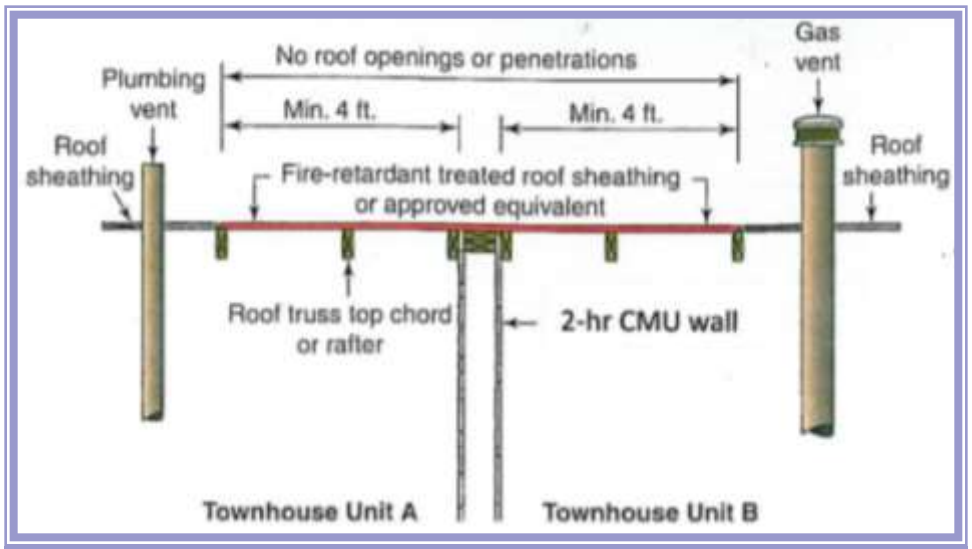

No Roof Openings or Penetrations Within 4 Feet of the Townhouse Separation Are Allowed When Using the Exception to the Parapet Provisions

A masonry wall meeting requirements for 2 hour fire rating is required. No combustible material may extend through the firewall. The firewall must extend out to the back of the fascia board when there is an overhang.

Parapets (R302.2.3): Parapets constructed in accordance with Section R302.2.3 shall be constructed for townhouses as an extension of exterior walls or common walls in accordance with the following:

Where roof surfaces adjacent to the wall or walls are at the same elevation, the parapet shall extend not less than 30 inches above the roof surfaces.

Where roof surfaces adjacent to the wall or walls are at different elevations and the higher roof is not more than 30 inches above the lower roof, the parapet shall extend not less than 30 inches above the lower roof surface.

Exception: A parapet is not required in the two cases above when the roof is covered with a minimum class C roof covering, and the roof decking or sheathing is of noncombustible materials or approved fire-retardant-treated wood for a distance of 4 feet on each side of the wall or walls, or one layer of $^{5}/_{8}$-inch Type X gypsum board is installed directly beneath the roof decking or sheathing, supported by a minimum of nominal 2-inch ledgers attached to the sides of the roof framing members, for a minimum distance of 4 feet on each side of the wall or walls and there are no openings or penetrations in the roof within 4 feet of the common walls.

A parapet is not required where roof surfaces adjacent to the wall or walls are at different elevations and the higher roof is more than 30 inches above the lower roof. The common wall construction from the lower roof to the underside of the higher roof deck shall have not less than a 1-hour fire-resistance rating. The wall shall be rated for exposure from both sides.

Parapet construction (R302.2.3): Parapets shall have the same fire-resistance rating as that required for the supporting wall or walls. On any side adjacent to a roof surface, the parapet shall have noncombustible faces for the uppermost 18 inches, to include counterflashing and coping materials. Where the roof slopes toward a parapet at slopes greater than 2 units vertical in 12 units horizontal (16.7-percent slope), the parapet shall extend to the same height as any portion of the roof within a distance of 3 feet, but in no case shall the height be less than 30 inches.

Structural independence (R302.2.4): Each individual townhouse shall be structurally independent.

Exceptions:

1. Foundations supporting exterior walls or common walls.
2. Structural roof and wall sheathing from each unit may fasten to the common wall framing.
3. Nonstructural wall and roof coverings.
4. Flashing at termination of roof covering over common wall.
5. Sound Insulation

Air Borne Sound (AK102.1): Air-borne sound insulation for wall and floor-ceiling assemblies shall meet a sound transmission class (STC) rating of 45 when tested in accordance with ASTM E 90. Penetrations or openings in construction assemblies for piping; electrical devices; recessed cabinets; bathtubs; soffits; or heating, ventilating or exhaust ducts shall be sealed, lined, insulated or otherwise treated to maintain the required ratings. Dwelling unit entrance doors, which share a common space, shall be tight fitting to the frame and sill.

Masonry (AK102.1.1): The sound transmission class of concrete masonry and clay masonry assemblies shall be calculated in accordance with TMS 0302 or determined through testing in accordance with ASTM E 90.

Structural Borne Sound (AK103.1): Floor/ceiling assemblies between dwelling units, or between a dwelling unit and a public or service area within a structure, shall have an impact insulation class (IIC) rating of not less than 45 when tested in accordance with ASTM E 492.

Mechanical Considerations

The installation of all HVAC appliances shall conform to the conditions of their label and the manufacturer's installation instructions. The manufacturer's installation and operating instructions shall remain attached to the appliances.

Equipment Located In Garages

Elevation of ignition source (M1307.3): Appliances having an ignition source shall be elevated such that the source of ignition is not less than 18 inches above the floor in garages. For the purpose of this section, rooms or spaces that are not part of the living space of a dwelling unit and that communicate with a private garage through openings shall be considered to be part of the garage.

Exception: Elevation of the ignition source is not required for appliances that are listed as flammable vapor ignition resistant.

Protection from impact (M1307.3.1): Appliances shall not be installed in a location subject to vehicle damage except where protected by approved barriers.

Opening protection (R302.5.1): Openings from a private garage directly into a room used for sleeping purposes shall not be permitted. Other openings between the garage and residence shall be equipped with solid wood doors not less than 1 $^{3}/_{8}$ inches in thickness, solid or honeycomb-core steel doors not less than 1 $^{3}/_{8}$ inches thick, or 20-minute fire-rated doors, equipped with a self-closing device.

Condensate disposal (M1411.3): Condensate from all cooling coils or evaporators shall be conveyed from the drain pan outlet to an approved place of disposal. Such piping shall maintain a minimum horizontal slope in the direction of discharge of not less than $^{1}/_{8}$ unit vertical in 12 units horizontal (1-percent slope). Condensate shall not discharge into a street, alley or other areas where it would cause a nuisance.

Auxiliary and secondary drain systems (M1411.3.1): In addition to the requirements of Section M1411.3, a secondary drain or auxiliary drain pan shall be required for each cooling or evaporator coil where damage to any building components will occur as a result of overflow from the equipment drain pan or stoppage in the condensate drain piping. Such piping shall maintain a minimum horizontal slope in the direction of discharge of not less than $^{1}/_{8}$ unit vertical in 12 units horizontal (1-percent slope). Drain piping shall be a minimum of ¾ -inch nominal pipe size. One of the following methods shall be used:

1. An auxiliary drain pan with a separate drain shall be installed under the coils on which condensation will occur. The auxiliary pan drain shall discharge to a conspicuous point of disposal to alert occupants in the event of a stoppage of the primary drain. The pan shall have a minimum depth of 1 ½ inches, shall not be less than 3 inches larger than the unit or the coil dimensions in width and length and shall be constructed of corrosion-resistant material. Galvanized sheet steel pans shall have a minimum thickness of not less than 0.0236-inch (No. 24 Gauge). Nonmetallic pans shall have a minimum thickness of not less than 0.0625 inch.
2. A separate overflow drain line shall be connected to the drain pan installed with the equipment. This overflow drain shall discharge to a conspicuous point of disposal to alert occupants in the event of a stoppage of the primary drain. The overflow drain line shall connect to the drain pan at a higher level than the primary drain connection.
3. An auxiliary drain pan without a separate drain line shall be installed under the coils on which condensation will occur. This pan shall be equipped with a water level detection device conforming to UL 508 that will shut off the equipment served prior to overflow of the pan. The pan shall be equipped with a fitting to allow for drainage. The auxiliary drain pan shall be constructed in accordance with Item 1 of this section.
4. A water level detection device conforming to UL 508 shall be installed that will shut off the equipment served in the event that the primary drain is blocked. The device shall be installed in the primary drain line, the overflow drain line or the equipment supplied drain pan, located at a point higher than the primary drain line connection and below the overflow rim of such pan.

Water-level monitoring devices (M1411.3.1.1): On down-flow units and all other coils that have no secondary drain or provisions to install a secondary or auxiliary drain pan, a water-level monitoring device shall be installed inside the primary drain pan. This device shall shut off the equipment served in the event that the primary drain becomes restricted. Devices shall not be installed in the drain line.

Equipment Located In Attic or Crawl Spaces

Appliance access for inspection service, repair and replacement (M1305.1): Appliances shall be accessible for inspection, service, repair and replacement without removing permanent construction, other appliances, or any other piping or ducts not connected to the appliance being inspected, serviced, repaired or replaced. A level working space at least 30 inches deep and 30 inches wide shall be provided in front of the control side to service an appliance. Installation of room heaters shall be permitted with at least an 18-inch working space. A platform shall not be required for room heaters.

Appliances in attics (M1305.1.3): Attics containing appliances shall be provided with an opening and a clear and unobstructed passageway large enough to allow removal of the largest appliance, but not less than 30 inches high and 22 inches wide and not more than 20 feet long measured along the centerline of the passageway from the opening to the appliance. The passageway shall have continuous solid flooring in accordance with Chapter 5 not less than 24 inches wide. A level service space at least 30 inches deep and 30 inches wide shall be present along all sides of the appliance where access is required. The clear access opening dimensions shall be a minimum of 20 inches by 30 inches, and large enough to allow removal of the largest appliance.

Exceptions:

1. The passageway and level service space are not required where the appliance can be serviced and removed through the required opening.
2. Where the passageway is unobstructed and not less than 6 feet high and 22 inches wide for its entire length, the passageway shall be not more than 50 feet long.

Electrical requirements (M1305.1.3.1): A luminaire controlled by a switch located at the required passageway opening and a receptacle outlet shall be installed at or near the appliance location in accordance with Chapter 39.

Appliances under floors (M1305.1.4): Under floor spaces containing appliances shall be provided with an unobstructed passageway large enough to remove the largest appliance, but not less than 30 inches high and 22 inches wide, nor more than 20 feet long measured along the centerline of the passageway from the opening to the appliance. A level service space at least 30 inches deep and 30 inches wide shall be present at the front or service side of the appliance. If the depth of the passageway or the service space exceeds 12 inches below the adjoining grade, the walls of the passageway shall be lined with concrete or masonry extending 4 inches above the adjoining grade in accordance with Chapter 4. The rough-framed access opening dimensions shall be a minimum of 22 inches by 30 inches, and large enough to remove the largest appliance.

Exceptions:

1. The passageway is not required where the level service space is present when the access is open, and the appliance can be serviced and removed through the required opening.
2. Where the passageway is unobstructed and not less than 6 feet high and 22 inches wide for its entire length, the passageway shall not be limited in length.

Ground clearance (M1305.1.4.1): Equipment and appliances supported from the ground shall be level and firmly supported on a concrete slab or other approved material extending not less than 3 inches above the adjoining ground. Such support shall be in accordance with the manufacturer's installation instructions. Appliances suspended from the floor shall have a clearance of not less than 6 inches from the ground.

Excavations (M1305.1.4.2): Excavations for appliance installations shall extend to a depth of 6 inches below the appliance and 12 inches on all sides, except that the control side shall have a clearance of 30 inches.

Electrical requirements (M1305.1.4.3): A luminaire controlled by a switch located at the required passageway opening and a receptacle outlet shall be installed at or near the appliance location in accordance with Chapter 39.

Exhaust Ducts and Exhaust Openings

Ducts (M1506.1): Where exhaust duct construction is not specified in this chapter, construction shall comply with Chapter 16.

Exhaust openings (M1506.2): Air exhaust openings shall terminate not less than 3 feet from property lines; 3 feet from operable and non-operable openings into the building and 10 feet from mechanical air intakes except where the opening is located 3 feet above the air intake. Openings shall comply with Sections R303.5.2 and R303.6.

Above-Ground Duct Systems (M1601.1)

Duct design (M1601.1): Duct systems serving heating, cooling and ventilation equipment shall be installed in accordance with the provisions of this section and ACCA Manual D or other approved methods.

Above-ground duct systems (M1601.1.1): Above-ground duct systems shall conform to the following:

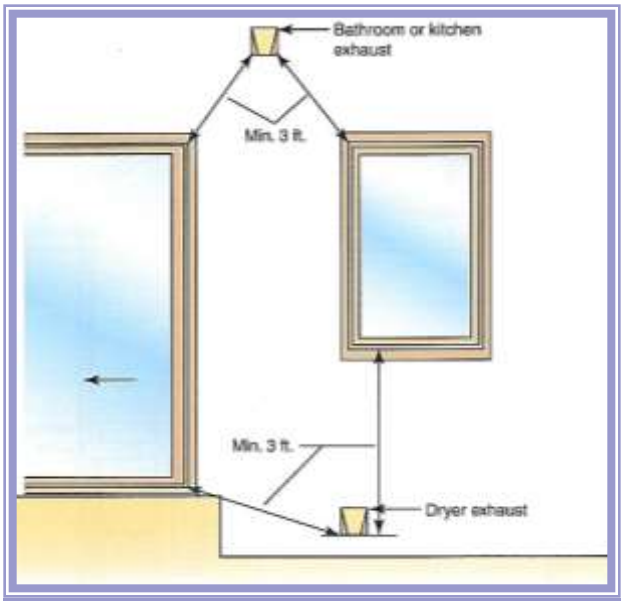

Minimum Clearance from Exhaust Openings

1. Equipment connected to duct systems shall be designed to limit discharge air temperature to a maximum of 250°F.
2. Factory-made air ducts shall be constructed of Class 0 or Class 1 materials as designated in Table M1601.1.1(1).
3. Fibrous duct construction shall conform to the SMACNA Fibrous Glass Duct Construction Standards or NAIMA Fibrous Glass Duct Construction Standards.
4. Minimum thickness of metal duct material shall be as listed in Table M1601.1.1(2). Galvanized steel shall conform to ASTM A 653. Metallic ducts shall be fabricated in accordance with SMACNA Duct Construction Standards Metal and Flexible.
5. Use of gypsum products to construct return air ducts or plenums is permitted, provided that the air temperature does not exceed 125°F and exposed surfaces are not subject to condensation.
6. Duct systems shall be constructed of materials having a flame spread index not greater than 200.
7. Stud wall cavities and the spaces between solid floor joists to be used as air plenums shall comply with the following conditions:
   a. These cavities or spaces shall not be used as a plenum for supply air.
   b. These cavities or spaces shall not be part of a required fire-resistance-rated assembly.
   c. Stud wall cavities shall not convey air from more than one floor level.
   d. Stud wall cavities and joist-space plenums shall be isolated from adjacent concealed spaces by tight-fitting fireblocking in accordance with Section R602.8.
   e. Stud wall cavities in the outside walls of building envelope assemblies shall not be utilized as air plenums.

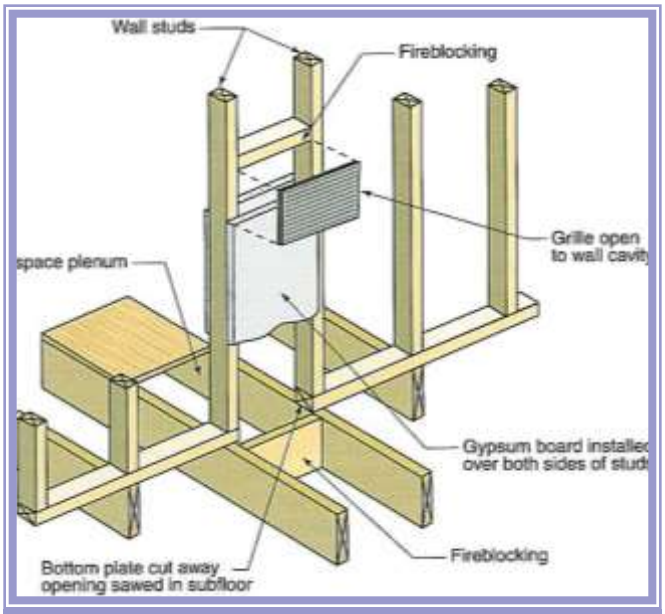

Acceptable Stud and Joist Space Installation

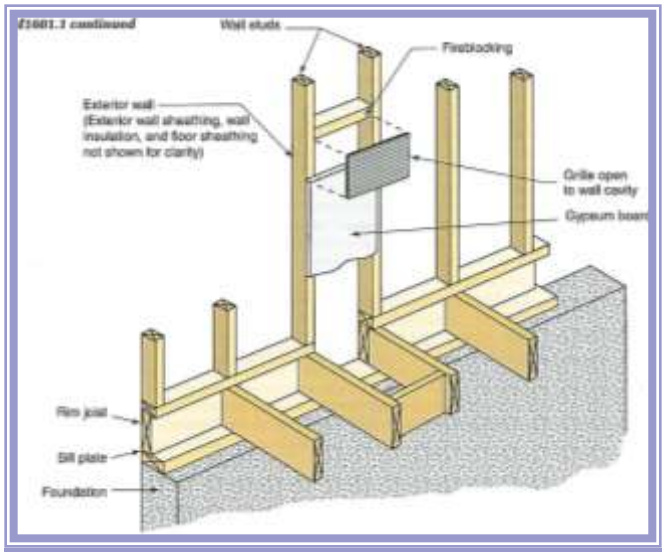

Prohibited Stud Space Plenum in Exterior Wall

Duct Joints, Seams and Connections

Joints, seams and connections (M1601.4.1): All longitudinal and transverse joints, seams and connections in metallic and nonmetallic ducts shall be constructed as specified in SMACNA HVAC Duct Construction Standards—Metal and Flexible and NAIMA Fibrous Glass Duct Construction Standards. All joints, longitudinal and transverse seams, and connections in ductwork shall be securely fastened and sealed with welds, gaskets, mastics (adhesives), mastic-plus-embedded-fabric systems or tapes. Closure systems used to seal flexible air ducts and flexible air connectors shall comply with UL 181B and shall be marked "181 B-FX" for pressure-sensitive tape or "181 BM" for mastic. Duct connections to flanges of air distribution system equipment shall be sealed and mechanically fastened. Mechanical fasteners for use with flexible nonmetallic air ducts shall comply with UL 181B and shall be marked 181B-C. Crimp joints for round metallic ducts shall have a contact lap of not less than 1 inch and shall be mechanically fastened by means of not less than three sheet-metal screws or rivets equally spaced around the joint. Closure systems used to seal metal ductwork shall be installed in accordance with the manufacturer's instructions. Round metallic ducts shall be mechanically fastened by means of at least three sheet metal screws or rivets spaced equally around the joint. Unlisted duct tape shall not be permitted as a sealant on any duct.

Exceptions:

1. Spray polyurethane foam shall be permitted to be applied without additional joint seals.
2. Where a duct connection is made that is partially inaccessible, three screws or rivets shall be equally spaced on the exposed portion of the joint so as to prevent a hinge effect.
3. Continuously welded and locking-type longitudinal joints and seams in ducts operating at static pressures less than 2 inches of water column pressure classification shall not require additional closure systems.

Appliance and Gas Connection

Slopes (G2419.1): Piping for other than dry gas conditions shall be sloped not less than 0.25 inch in 15 feet to prevent traps.

Drips (G2419.2): Where wet gas exists, a drip shall be provided at any point in the line of pipe where condensate could collect. A drip shall also be provided at the outlet of the meter and shall be installed so as to constitute a trap wherein an accumulation of condensate will shut off the flow of gas before the condensate will run back into the meter.

Prohibited locations (G2420.1.2): Shutoff valves shall be prohibited in concealed locations and furnace plenums.

Access to shutoff valves (G2420.1.3): Shutoff valves shall be located in places so as to provide access for operation and shall be installed so as to be protected from damage.

Appliance shutoff valve (G2420.5): Each appliance shall be provided with a shutoff valve in accordance with Section G2420.5.1, G2420.5.2 or G2420.5.3.

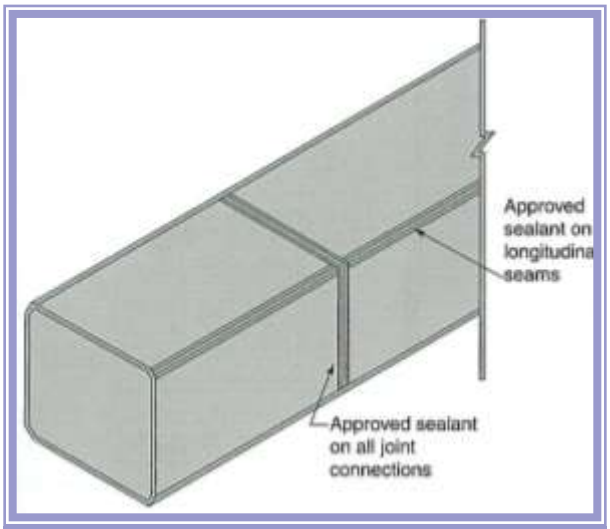

Duct Joints, Seams and Connections Must be Securely Fastened and Sealed

Located within same room (G2420.5.1): The shutoff valve shall be located in the same room as the appliance. The shutoff valve shall be within 6 feet of the appliance, and shall be installed upstream of the union, connector or quick disconnect device it serves. Such shutoff valves shall be provided with access. Appliance shutoff valves located in the firebox of a fireplace shall be installed in accordance with the appliance manufacturer's instructions.

Vented decorative appliances and room heaters (G2420.5.2): Shutoff valves for vented decorative appliances, room heaters and decorative appliances for installation in vented fireplaces shall be permitted to be installed in an area remote from the appliances where such valves are provided with ready access. Such valves shall be permanently identified and shall serve no other appliance. The piping from the shutoff valve to within 6 feet of the appliance shall be designed, sized and installed in accordance with Sections G2412 through G2419.

Located at manifold (G2420.5.3): Where the appliance shutoff valve is installed at a manifold, such shutoff valve shall be located within 50 feet of the appliance served and shall be readily accessible and permanently identified. The piping from the manifold to within 6 feet of the appliance shall be designed, sized and installed in accordance with Sections G2412 through G2419.

Fireplaces

Vented decorative appliances and room heaters (G2420.5.2): Shutoff valves for vented decorative appliances, room heaters and decorative appliances for installation in vented fireplaces shall be permitted to be installed in an area remote from the appliances where such valves are provided with ready access. Such valves shall be permanently identified and shall serve no other appliance. The piping from the shutoff valve to within 6 feet of the appliance shall be designed, sized and installed in accordance with Sections G2412 through G2419.

Draft stopping (R302.12): In combustible construction where there is usable space both above and below the concealed space of a floor/ceiling assembly, draft stops shall be installed so that the area of the concealed space does not exceed 1,000 square feet. Draft stopping shall divide the concealed space into approximately equal areas. Where the assembly is enclosed by a floor membrane above and a ceiling membrane below, draft stopping shall be provided in floor/ceiling assemblies under the following circumstances:

1. Ceiling is suspended under the floor framing.
2. Floor framing is constructed of truss-type open-web or perforated members.

Combustible insulation clearance (R302.13): Combustible insulation shall be separated a minimum of 3 inches from recessed luminaires, fan motors and other heat-producing devices.

Exception: Where heat-producing devices are listed for lesser clearances, combustible insulation complying with the listing requirements shall be separated in accordance with the conditions stipulated in the listing. Recessed luminaires installed in the building thermal envelope shall meet the requirements of Section N1102.4.4 of this code.

Chimneys and Vents

Footings and foundations (R1003.2): Footings for masonry chimneys shall be constructed of concrete or solid masonry at least 12 inches thick and shall extend at least 6 inches beyond the face of the foundation or support wall on all sides. Footings shall be founded on natural undisturbed earth or engineered fill below frost depth. In areas not subjected to freezing, footings shall be at least 12 inches below finished grade.

Changes in dimension (R1003.6): The chimney wall or chimney flue lining shall not change in size or shape within 6 inches above or below where the chimney passes through floor components, ceiling components or roof components.

Termination (R1003.9): Chimneys shall extend at least 2 feet higher than any portion of a building within 10 feet, but shall not be less than 3 feet above the highest point where the chimney passes through the roof.

Chimney caps (R1003.9.1): Masonry chimneys shall have a concrete, metal or stone cap, sloped to shed water, a drip edge and a caulked bond break around any flue liners in accordance with ASTM C 1283.

Spark arrestors (R1003.9.2): Where a spark arrestor is installed on a masonry chimney, the spark arrestor shall meet all of the following requirements:

1. The net free area of the arrestor shall not be less than four times the net free area of the outlet of the chimney flue it serves.
2. The arrestor screen shall have heat and corrosion resistance equivalent to 19-gauge galvanized steel or 24-gage stainless steel.
3. Openings shall not permit the passage of spheres having a diameter greater than ½ inch nor block the passage of spheres having a diameter less than $^3/_8$ inch.
4. The spark arrestor shall be accessible for cleaning and the screen or chimney cap shall be removable to allow for cleaning of the chimney flue.

Rain caps (R1003.9.3): Where a masonry or metal rain cap is installed on a masonry chimney, the net free area under the cap shall not be less than four times the net free area of the outlet of the chimney flue it serves.

Length (M1803.3.2): The horizontal run of an uninsulated connector to a natural draft chimney shall not exceed 75 percent of the height of the vertical portion of the chimney above the connector. The horizontal run of a listed connector to a natural draft chimney shall not exceed 100 percent of the height of the vertical portion of the chimney above the connector.

Size (M1803.3.3): A connector shall not be smaller than the flue collar of the appliance.

Exception: Where installed in accordance with the appliance manufacturer's installation instructions.

Combustion Air

Two-permanent-openings method (G2407.6.1): Two permanent openings, one commencing within 12 inches of the top and one commencing within 12 inches of the bottom of the enclosure, shall be provided. The openings shall communicate directly, or by ducts, with the outdoors or spaces that freely communicate with the outdoors.

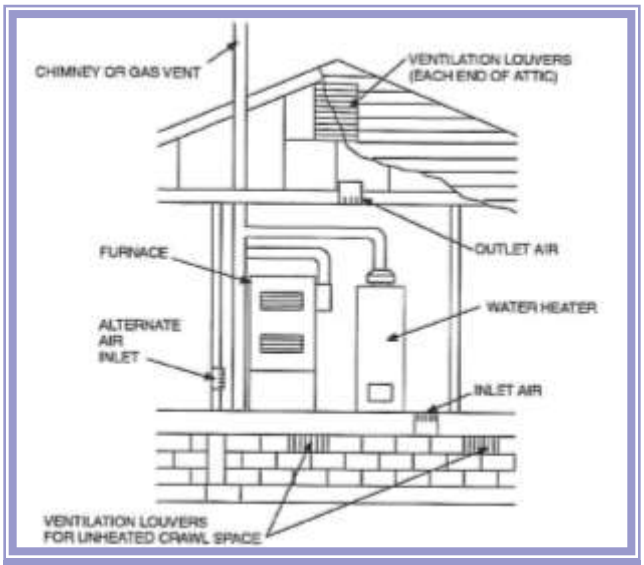

Figure G2407.6.1(1) - All Air From Outdoor Inlet Air From Ventilated Crawl Space and Outlet Air To Ventilated Attic

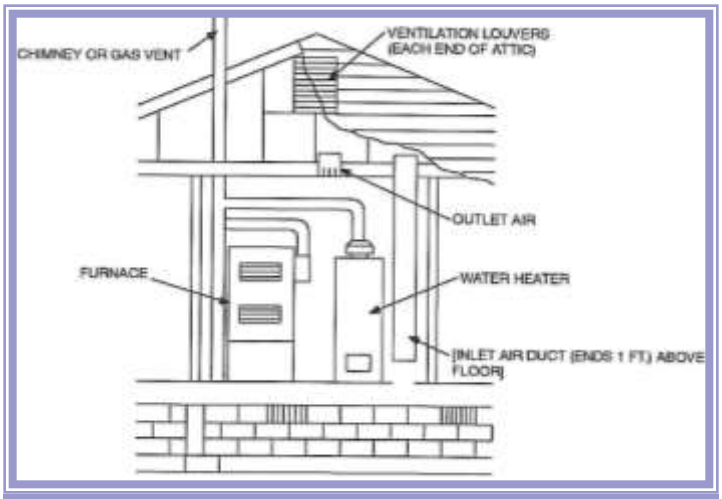

Figure G2407.6.1(2) - All Air From Outdoors Through Ventilated Attic

Plumbing Considerations

Inspection and Testing

Inspection required (P2503.1): New plumbing work and parts of existing systems affected by new work or alterations shall be inspected by the building official to ensure compliance with the requirements of this code.

Concealment (P2503.2): A plumbing or drainage system, or part thereof, shall not be covered, concealed or put into use until it has been tested, inspected and approved by the building official.

Building sewer testing (P2503.4): The building sewer shall be tested by insertion of a test plug at the point of connection with the public sewer and filling the building sewer with water, testing with not less than a 10-foot head of water and be able to maintain such pressure for 15 minutes.

DWV systems testing (P2503.5): Rough and finished plumbing installations shall be tested in accordance with Sections P2503.5.1 and P2503.5.2.

Rough plumbing (P2503.5.1): DWV systems shall be tested on completion of the rough piping installation by water or for piping systems other than plastic, by air with no evidence of leakage. Either test shall be applied to the drainage system in its entirety or in sections after rough piping has been installed, as follows:

1. **Water test.** Each section shall be filled with water to a point not less than 10 feet above the highest fitting connection in that section, or to the highest point in the completed system. Water shall be held in the section under test for a period of 15 minutes. The system shall prove leak free by visual inspection.
2. **Air test.** The portion under test shall be maintained at a gauge pressure of 5 pounds per square inch (psi) or 10 inches of mercury column. This pressure shall be held without introduction of additional air for a period of 15 minutes.503.5.1 and P2503.5.2.

Water-supply system testing (P2503.7): Upon completion of the water-supply system or a section of it, the system or portion completed shall be tested and proved tight under a water pressure of not less than the working pressure of the system or, for piping systems other than plastic, by an air test of not less than 50 psi. This pressure shall be held for not less than 15 minutes. The water used for tests shall be obtained from a potable water source.

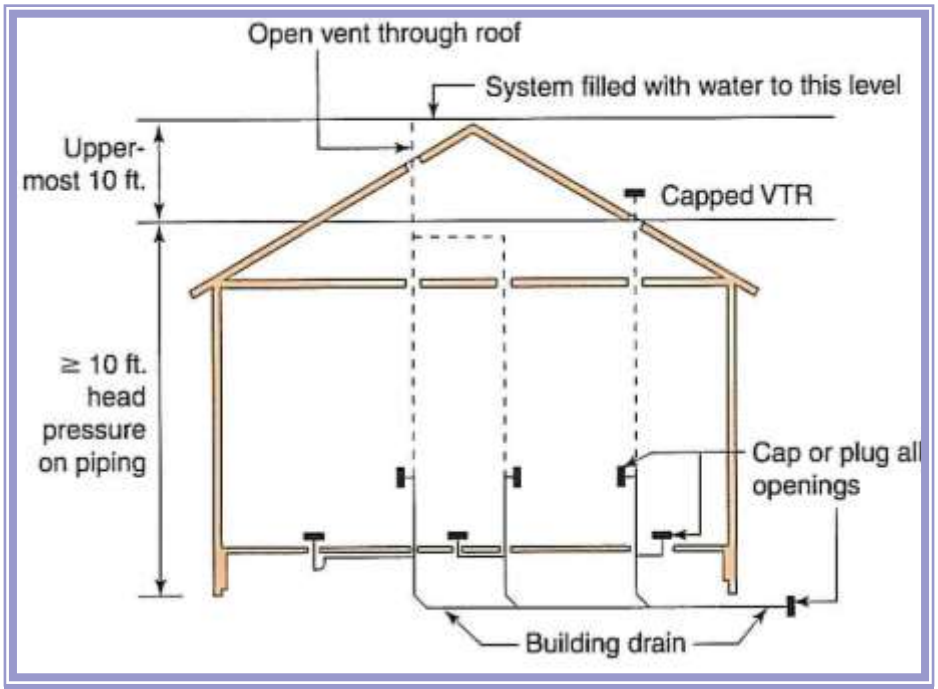

Water Test on Plastic Pipe DWV System

Inspection and testing of backflow prevention devices (P2503.8): Inspection and testing of backflow prevention devices shall comply with Sections P2503.8.1 and P2503.8.2.

Inspections (P2503.8.1): Inspections shall be made of all backflow prevention assemblies to determine whether they are operable.

Testing (P2503.8.2): Reduced pressure principle, double check, double check detector and pressure vacuum breaker backflow preventer assemblies shall be tested at the time of installation, immediately after repairs or relocation and at least annually.

Test gauges (P2503.9): Gauges used for testing shall be as follows:

1. Tests requiring a pressure of 10 psi or less shall utilize a testing gauge having increments of 0.10 psi or less.
2. Tests requiring a pressure higher than 10 psi but less than or equal to 100 psi shall use a testing gauge having increments of 1 psi or less.
3. Tests requiring a pressure higher than 100 psi shall use a testing gauge having increments of 2 psi or less.

Sealing of Annular Spaces

Sealing of annular spaces (P2606.1): The annular space between the outside of a pipe and the inside of a pipe sleeve or between the outside of a pipe and an opening in a building envelope wall, floor, or ceiling assembly penetrated by a pipe shall be sealed with caulking material or foam sealant or closed with a gasketing system. The caulking material, foam sealant or gasketing system shall be designed for the conditions at the penetration location and shall be compatible with the pipe, sleeve and building materials in contact with the sealing materials. Annular spaces created by pipes penetrating fire-resistance-rated assemblies or membranes of such assemblies shall be sealed or closed in accordance with the building portion of this code.

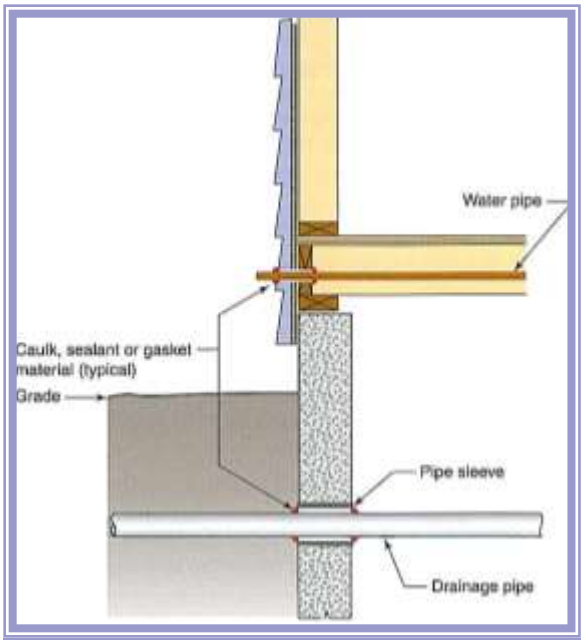

Sealing of Annular Spaces

Water Supply

Water supply system design criteria (P2903.1): The water service and water distribution systems shall be designed and pipe sizes shall be selected such that under conditions of peak demand, the capacities at the point of outlet discharge shall not be less than shown in Table P2903.1.

Table P2903.1—Required Capacities at Point of Outlet Discharge		
Fixture at Point of Outlet	Flow Rate (gpm)	Flow Pressure (psi)
Bathtub, pressure-balanced or thermostatic mixing valve	4	20
Bidet, thermostatic mixing	2	20
Dishwasher	2.75	8
Laundry Tub	4	8
Lavatory	2	8
Shower, pressure-balanced or thermostatic mixing valve	3	20
Sillcock, hose bibb	5	8
Sink	2.5	8
Water Closet, flushometer tank	1.6	20
Water Closet, tank, close coupled	3	20
Water Closet, tank, one piece	6	20

Service valve (P2903.9.1): Each dwelling unit shall be provided with an accessible main shutoff valve near the entrance of the water service. The valve shall be of a full open type having nominal restriction to flow, with provision for drainage such as a bleed orifice or installation of a separate drain valve

Building Drainage

Building drain and building sewer junction (P3005.2.7): There shall be a cleanout near the junction of the building drain and building sewer. This cleanout shall be either inside or outside the building wall, provided that it is brought up to finish grade or to the lowest floor level.

Spacing (P3005.2.2): Cleanouts shall be installed not more than 100 feet apart in horizontal drainage lines measured from the upstream entrance of the cleanout.

Accessibility (P3005.2.5): Cleanouts shall be accessible. The clearance in front of cleanouts shall be not less than 18 inches on 3-inch and larger pipes, and not less than 12 inches on smaller pipes. Concealed cleanouts shall be provided with access of sufficient size to permit removal of the cleanout plug and rodding of the system. Cleanout plugs shall not be concealed by permanent finishing material.

Horizontal drainage piping slope (P3005.3): Horizontal drainage piping shall be installed in uniform alignment at uniform slopes not less than $^1/_4$ unit vertical in 12 units horizontal (2-percent slope) for 2 $^1/_2$ inch diameter and less, and not less than $^1/_8$ unit vertical in 12 units horizontal (1-percent slope) for diameters of 3 inches or more.

Venting

Required vent extension (P3102.1): The vent system serving each building drain shall have at least one vent pipe that extends to the outdoors.

Installation (P3102.2): The required vent shall be a dry vent that connects to the building drain or an extension of a drain that connects to the building drain. Such vent shall not be an island fixture vent as permitted by Section P3112.

Grade (P3104.2): Vent and branch vent pipes shall be graded, connected and supported to allow moisture and condensate to drain back to the soil or waste pipe by gravity.

Plumbing Fixtures

Shower control valves (P2708.3): Individual shower and tub/shower combination valves shall be equipped with control valves of the pressure-balance, thermostatic-mixing or combination pressure-balance/thermostatic-mixing valve types with a high limit stop in accordance with ASSE 1016 or ASME A112.18.1/CSA B125.1. The high limit stop shall be set to limit the water temperature to not greater than 120°F. In-line thermostatic valves shall not be used for compliance with this section.

Laundry tray connection (P2706.2.1): A laundry tray waste line is permitted to connect into a standpipe for the automatic clothes washer drain. The standpipe shall extend not less than 30 inches above the trap weir and shall extend above the flood level rim of the laundry tray. The outlet of the laundry tray shall not be greater than 30 inches horizontal distance from the standpipe trap.

Minimum size (P2703.1): Fixture tail pieces shall be not less than 1 ½ inches in diameter for sinks, dishwashers, laundry tubs, bathtubs and similar fixtures, and not less than 1 ¼ inches in diameter for bidets, lavatories and similar fixtures.

Bathtub and whirlpool bathtub valves (P2713.3): Hot water supplied to bathtubs and whirlpool bathtubs shall be limited to a temperature of not greater than 120°F by a water temperature limiting device that conforms to ASSE 1070 or CSA B125.3, except where such protection is otherwise provided by a combination tub/shower valve in accordance with Section P2708.3.

Sink, dishwasher and food grinder (P2717.3): The combined discharge from a sink, dishwasher, and waste grinder is permitted to discharge through a single 1 ½-inch trap. The discharge pipe from the dishwasher shall be increased to not less than ¾ inch in diameter and shall connect with a wye fitting between the discharge of the food-waste grinder and the trap inlet or to the head of the food grinder. The dishwasher waste line shall rise and be securely fastened to the underside of the counter before connecting to the sink tail piece or the food grinder.

Floor drains (P2719.1): Floor drains shall have waste outlets not less than 2 inches in diameter and a removable strainer. The floor drain shall be constructed so that the drain can be cleaned. Access shall be provided to the drain inlet. Floor drains shall not be located under or have their access restricted by permanently installed appliances.

Whirlpool bathtub Access to pump (P2720.1): Access shall be provided to circulation pumps in accordance with the fixture or pump manufacturer's installation instructions. Where the manufacturer's instructions do not specify the location and minimum size of field-fabricated access openings, an opening of not less than 12-inches by 12-inches shall be installed for access to the circulation pump. Where pumps are located more than 2 feet from the access opening, an opening of not less than 18 inches by 18 inches shall be installed. A door or panel shall be permitted to close the opening. In all cases, the access opening shall be unobstructed and be of the size necessary to permit the removal and replacement of the circulation pump.

Appliance access for inspection service, repair and replacement (M1305.1): Appliances shall be accessible for inspection, service, repair and replacement without removing permanent construction, other appliances, or any other piping or ducts not connected to the appliance being inspected, serviced, repaired or replaced. A level working space at least 30 inches deep and 30 inches wide shall be provided in front of the control side to service an appliance.

Hose connection (P2902.4.3): Sillcocks, hose bibbs, wall hydrants and other openings with a hose connection shall be protected by an atmospheric-type or pressure-type vacuum breaker or a permanently attached hose connection vacuum breaker.

Water Heaters

Water heater valve (P2903.9.2): A readily accessible full open valve shall be installed in the cold-water supply pipe to each water heater at or near the water heater.

Relief valves required (P2803.1): Appliances and equipment used for heating water or storing hot water shall be protected by:

1. A separate pressure-relief valve and a separate temperature-relief valve; or
2. A combination pressure- and temperature-relief valve.

Required pan (P2801.5): Where a storage tank-type water heater or a hot water storage tank is installed in a location where water leakage from the tank will cause damage, the tank shall be installed in a galvanized steel pan having a material thickness of not less than 0.0236 inch (No. 24 gage), or other pans approved for such use. Listed pans shall comply with CSA LC3.

Pan size and drain (P2801.5.1): The pan shall be not less than 1 ½ inches deep and shall be of sufficient size and shape to receive all dripping or condensate from the tank or water heater. The pan shall be drained by an indirect waste pipe of not less than ¾ inch diameter. Piping for safety pan drains shall be of those materials listed in Table P2905.5.

Pan drain termination (P2801.5.2): The pan drain shall extend full-size and terminate over a suitably located indirect waste receptor or shall extend to the exterior of the building and terminate not less than 6 inches and not more than 24 inches above the adjacent ground surface.

Water heaters installed in garages (P2801.6): Water heaters having an ignition source shall be elevated such that the source of ignition is not less than 18 inches above the garage floor.

Exception: Elevation of the ignition source is not required for appliances that are listed as flammable vapor ignition-resistant.

Relief valves required (P2803.1): Appliances and equipment used for heating water or storing hot water shall be protected by:

1. A separate pressure-relief valve and a separate temperature-relief valve; or
2. A combination pressure- and temperature-relief valve.

Rating (P2803.2): Relief valves shall have a minimum rated capacity for the equipment served and shall conform to ANSI Z21.22.

Pressure-relief valves (P2803.3): Pressure-relief valves shall have a relief rating adequate to meet the pressure conditions for the appliances or equipment protected. In tanks, they shall be installed directly into a tank tapping or in a water line close to the tank. They shall be set to open at not less than 25 psi above the system pressure but not over 150 psi. The relief-valve setting shall not exceed the tanks rated working pressure.

Temperature-relief valves (P2803.4): Temperature-relief valves shall have a relief rating compatible with the temperature conditions of the appliances or equipment protected. The valves shall be installed such that the temperature-sensing element monitors the water within the top 6 inches of the tank. The valve shall be set to open at a temperature of not greater than 210°F.

Combination pressure-/temperature-relief valves (P2803.5): Combination pressure-/temperature-relief valves shall comply with all the requirements for separate pressure- and temperature-relief valves.

Installation of relief valves (P2803.6): A check or shutoff valve shall not be installed in the following locations:

1. Between a relief valve and the termination point of the relief valve discharge pipe;
2. Between a relief valve and a tank; or
3. Between a relief valve and heating appliances or equipment.

Requirements for discharge pipe (P2803.6.1): The discharge piping serving a pressure-relief valve, temperature relief valve or combination valve shall:

1. Not be directly connected to the drainage system.
2. Discharge through an air gap located in the same room as the water heater.
3. Not be smaller than the diameter of the outlet of the valve served and shall discharge full size to the air gap.
4. Serve a single relief device and shall not connect to piping serving any other relief device or equipment.
5. Discharge to the floor, to the pan serving the water heater or storage tank, to a waste receptor or to the outdoors.
6. Discharge in a manner that does not cause personal injury or structural damage.
7. Discharge to a termination point that is readily observable by the building occupants.
8. Not be trapped.
9. Be installed to flow by gravity.
10. Not terminate more than 6 inches above the floor or waste receptor.
11. Not have a threaded connection at the end of the piping.
12. Not have valves or tee fittings.
13. Be constructed of those materials listed in Section P2904.5 or materials tested, rated and approved for such use in accordance with ASME A112.4.1.

Electrical Considerations

All electrical work will to conform to the 2012 International Residential Code and the 2011 National Electric Code. The National Electrical Code is intended to be suitable for mandatory application by governmental bodies that exercise legal jurisdiction over electrical installations. The authority having jurisdiction for enforcement of the Code has the responsibility for making interpretations of the rules, for deciding on the approval of equipment and materials, and for granting the special permission contemplated in a number of the rules. The authority having jurisdiction may waive specific requirements of the Code or permit alternate methods where it is assured that equivalent objectives can be achieved by establishing and maintaining effective safety.

Refer to **Electric Service Guideline** for Empire District Electric Company details and specifications.

Temporary Power Requirements

- The City of Republic does not inspect Temporary Services
- #6 Copper ground from meter base to grounding rod
- G.F.I. protected receptacles
- Weather-proof enclosure

Permanent Power Requirements

- Properly sized continuous copper grounding conductor from meter base to intersystem bonding bar to service conduit metal sweep bond to grounding rod to UFER ground.
- Panel cover in place.
- Conduit from meter base to ditch with metal sweep and bonding strap.
- Ditch 24” deep
- Properly sized feeders from meter base to panel board.
- Combination meter base with main service disconnecting means. Contractor is to supply meter base.
- Electrical combination meter base shall be installed on the side of the building toward the front with direct sight to the building transformer.
- Meter base height from finished grade level must be between 4 and 6 feet.
- Any building with more than one meter shall have address permanently marked on meter base, using engraved plastic laminate tags with 1-inch numbers, before permanent power will be hooked up.
- Roof must be completed
- No building will be approved with wet wiring.
- If more than one meter address, addresses must be permanently marked on meters using engraved plastic laminate labels with 1-inch tall numbers.

Concrete-encased electrode (E3608.1.2): A concrete encased electrode consisting of at least 20 feet of either of the following shall be considered as a grounding electrode:

1. One or more bare or zinc galvanized or other electrically conductive coated steel reinforcing bars or rods not less than ½ inch in diameter, installed in one continuous 20-foot length, or if in multiple pieces connected together by the usual steel tie wires, exothermic welding, welding, or other effective means to create a 20-foot or greater length.
2. A bare copper conductor not smaller than 4 AWG.

Metallic components shall be encased by at least 2 inches of concrete and shall be located horizontally within that portion of a concrete foundation or footing that is in direct contact with the earth or within vertical foundations or structural components or members that are in direct contact with the earth. Where multiple concrete-encased electrodes are present at a building or structure, only one shall be required to be bonded into the grounding electrode system.

Supplemental electrode required (E3608.4): A single rod, pipe, or plate electrode shall be supplemented by an additional electrode of a type specified in Sections E3608.1.2 through E3608.1.6. The supplemental electrode shall be bonded to one of the following:

1. A rod, pipe, or plate electrode.
2. A grounding electrode conductor.
3. A grounded service-entrance conductor.
4. A nonflexible grounded service raceway.
5. A grounded service enclosure.

Where multiple rod, pipe, or plate electrodes are installed to meet the requirements of this section, they shall not be less than 6 feet apart.

Exception: Where a single rod, pipe, or plate grounding electrode has a resistance to earth of 25 ohms or less, the supplemental electrode shall not be required.

Metal underground gas piping system (E3608.6): A metal underground gas piping system shall not be used as a grounding electrode.

Other Electrical Considerations

Inspection required (E3403.2): New electrical work and parts of existing systems affected by new work or alterations shall be inspected by the building official to ensure compliance with the requirements of Chapters 34 through 43.

Grounded Conductor (2011 NEC Section 200.7): Dryers, stoves, electric furnaces, etc shall be connected with appropriately sized 3-conductor wire with insulated ground. The white (neutral) conductor shall not be used as a phase conductor.

Foyers (E3901.11): Foyers that are not part of a hallway in accordance with Section E3901.10 and that have an area that is greater than 60 square feet shall have a receptacle (s) located in each wall space that is 3 feet or more in width and unbroken by doorways, floor-to-ceiling windows, and similar openings.

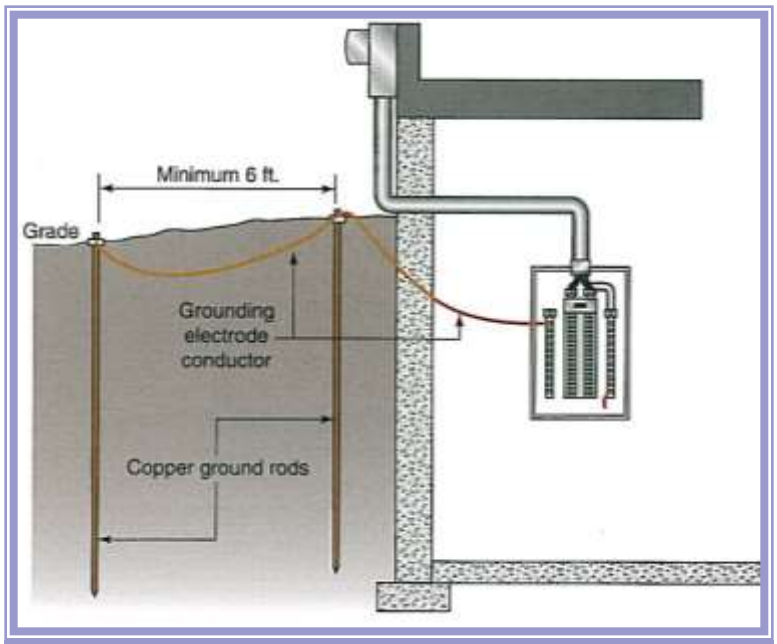

Supplemental Rod Electrode

Boxes at fan outlets (E3905.8): Outlet boxes and outlet box systems used as the sole support of ceiling-suspended fans (paddle) shall be marked by their manufacturer as suitable for this purpose and shall not support ceiling-suspended fans (paddle) that weigh more than 70 pounds. For outlet boxes and outlet box systems designed to support ceiling-suspended fans (paddle) that weigh more than 35 pounds, the required marking shall include the maximum weight to be supported. Where spare, separately switched, ungrounded conductors are provided to a ceiling-mounted outlet box and such box is in a location acceptable for a ceiling-suspended (paddle) fan, the outlet box or outlet box system shall be listed for sole support of a ceiling-suspended (paddle) fan.

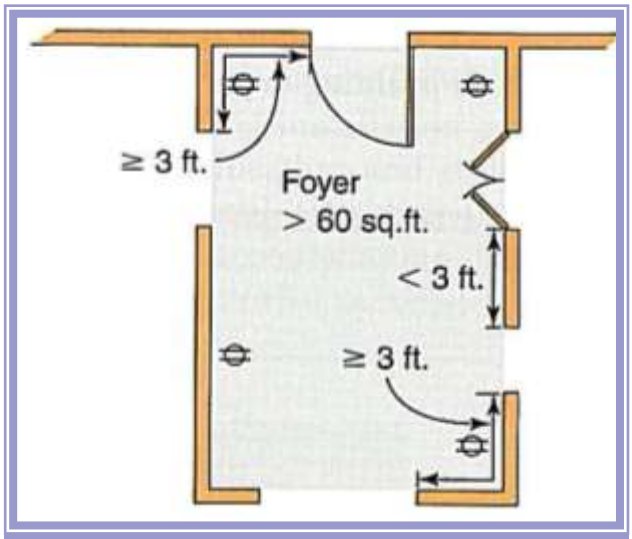

Receptacle Outlets in Foyers

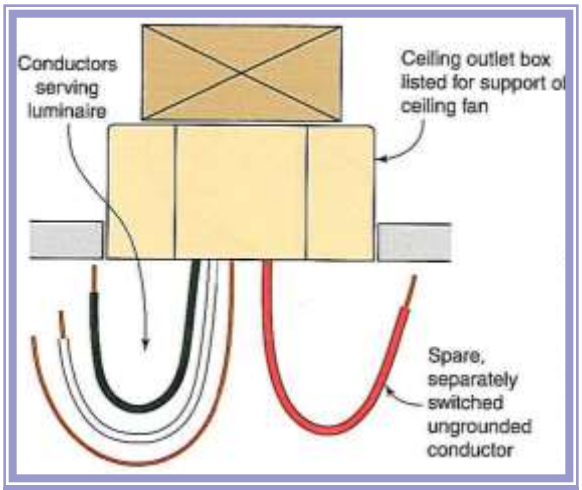

Support for Future Ceiling Fan

Switches Controlling Lighting Loads

Switches controlling lighting loads (E4001.15): Where switches control lighting loads supplied by a grounded general purpose branch circuit, the grounded circuit conductor for the controlled lighting circuit shall be provided at the switch location.

Exception: The grounded circuit conductor is not required to be provided at the switch enclosure where either of the following conditions apply:

1. The conductors enter the box through a raceway. The raceway shall have sufficient cross-sectional area to accommodate the extension of the grounded circuit conductor of the lighting circuit to the switch location whether or not the conductors in the raceway are required to be increased in size to comply with Section E3705.3.
2. Cable assemblies enter the box through a framing cavity that is open at the top or bottom on the same floor level, or through a wall, floor, or ceiling that is unfinished on one side.

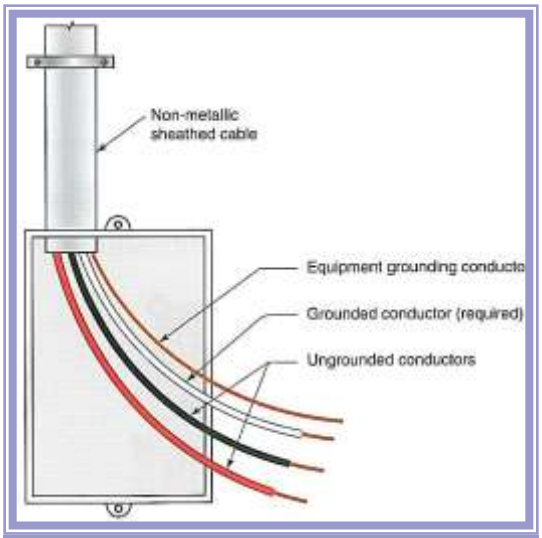

Required Conductors at Switch Outlet

Required Circuits

General purpose receptacle distribution (E3901.2): In every kitchen, family room, dining room, living room, parlor, library, den, sun room, bedroom, recreation room, or similar room or area of dwelling units, receptacle outlets shall be installed in accordance with the general provisions specified in Sections E3901.2.1 through E3901.2.3 (see Figure E3901.2).

Spacing (E3901.2.1): Receptacles shall be installed so that no point measured horizontally along the floor line of any wall space is more than 6 feet, from a receptacle outlet.

Wall space (E3901.2.2): As used in this section, a wall space shall include the following:

1. Any space that is 2 feet or more in width, including space measured around corners, and that is unbroken along the floor line by doorways and similar openings, fireplaces, and fixed cabinets.
2. The space occupied by fixed panels in exterior walls, excluding sliding panels.
3. The space created by fixed room dividers such as railings and freestanding bar-type counters.

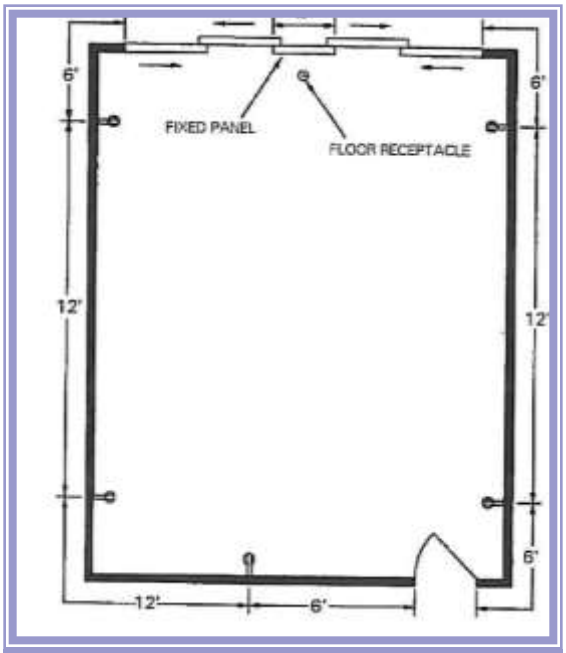

Figure E3901.2—General Use Receptacle Distribution

Branch circuits for heating (E3703.1): Central heating equipment other than fixed electric space heating shall be supplied by an individual branch circuit. Permanently connected air conditioning equipment, and auxiliary equipment directly associated with the central heating equipment such as pumps, motorized valves, humidifiers and electrostatic air cleaners, shall not be prohibited from connecting to the same branch circuit as the central heating equipment.

Kitchen and dining area receptacles (E3703.2): A minimum of two 20-ampere-rated branch circuits shall be provided to serve all wall and floor receptacle outlets located in the kitchen, pantry, breakfast area, dining area or similar area of a dwelling. The kitchen countertop receptacles shall be served by a minimum of two 20-ampere-rated branch circuits, either or both of which shall also be permitted to supply other receptacle outlets in the same kitchen, pantry, breakfast and dining area including receptacle outlets for refrigeration appliances.

Exception: The receptacle outlet for refrigeration appliances shall be permitted to be supplied from an individual branch circuit rated 15 amperes or greater.

Laundry circuit (E3703.3): A minimum of one 20-ampere rated branch circuit shall be provided for receptacles located in the laundry area and shall serve only receptacle outlets located in the laundry area.

Bathroom branch circuits (E3703.4): A minimum of one 20-ampere branch circuit shall be provided to supply bathroom receptacle outlet(s). Such circuits shall have no other outlets.

Exception: Where the 20-ampere circuit supplies a single bathroom, outlets for other equipment within the same bathroom shall be permitted to be supplied in accordance with Section E3702.

Lighting Outlets

Snap switch faceplates (E4001.11): Faceplates provided for snap switches mounted in boxes and other enclosures shall be installed so as to completely cover the opening and, where the switch is flush mounted, seat against the finished surface.

Faceplate grounding (E4001.11.1): Snap switches, including dimmer and similar control switches, shall be connected to an equipment grounding conductor and shall provide a means to connect metal faceplates to the equipment grounding conductor, whether or not a metal faceplate is installed. Snap switches shall be considered to be part of an effective ground-fault current path if either of the following conditions is met:

1. The switch is mounted with metal screws to a metal box or metal cover that is connected to an equipment grounding conductor or to a nonmetallic box with integral means for connecting to an equipment grounding conductor.
2. An equipment grounding conductor or equipment bonding jumper is connected to an equipment grounding termination of the snap switch.

Exceptions:

1. Where a means to connect to an equipment grounding conductor does not exist within the snap-switch enclosure or where the wiring method does not include or provide an equipment grounding conductor, a snap switch without a grounding connection to an equipment grounding conductor shall be permitted for replacement purposes only. A snap switch wired under the provisions of this exception and located within 8 feet vertically or 5 feet horizontally of ground or exposed grounded metal objects, shall be provided with a faceplate of non-conducting noncombustible material with nonmetallic attachment screws, except where the switch-mounting strap or yoke is nonmetallic or the circuit is protected by a ground-fault circuit interrupter.
2. Listed kits or listed assemblies shall not be required to be connected to an equipment grounding conductor if all of the following conditions apply:
   a. The device is provided with a nonmetallic faceplate that cannot be installed on any other type of device.
   b. The device does not have mounting means to accept other configurations of faceplates.
   c. The device is equipped with a nonmetallic yoke.
   d. All parts of the device that are accessible after installation of the faceplate are manufactured of nonmetallic materials.
3. Connection to an equipment grounding conductor shall not be required for snap switches that have an integral nonmetallic enclosure complying with Section E3905.13.

Habitable rooms (E3903.2): At least one wall switch-controlled lighting outlet shall be installed in every habitable room and bathroom.

Exceptions:

3. In other than kitchens and bathrooms, one or more receptacles controlled by a wall switch shall be considered equivalent to the required lighting outlet.
4. Lighting outlets shall be permitted to be controlled by occupancy sensors that are in addition to wall switches, or that are located at a customary wall switch location and equipped with a manual override that will allow the sensor to function as a wall switch.

Additional locations (E3903.3): At least one wall-switch-controlled lighting outlet shall be installed in hallways, stairways, attached garages, and detached garages with electric power. At least one wall-switch-controlled lighting outlet shall be installed to provide illumination on the exterior side of each outdoor egress door having grade level access, including outdoor egress doors for attached garages and detached garages with electric power. A vehicle door in a garage shall not be considered as an outdoor egress door. Where one or more lighting outlets are installed for interior stairways, there shall be a wall switch at each floor level and landing level that includes an entryway to control the lighting outlets where the stairway between floor levels has six or more risers.

Exception: In hallways, stairways, and at outdoor egress doors, remote, central, or automatic control of lighting shall be permitted.

Storage or equipment spaces (E3903.4): In attics, under-floor spaces, utility rooms and basements, at least one lighting outlet shall be installed where these spaces are used for storage or contain equipment requiring servicing. Such lighting outlet shall be controlled by a wall switch or shall have an integral switch. At least one point of control shall be at the usual point of entry to these spaces. The lighting outlet shall be provided at or near the equipment requiring servicing.

Ground Fault Circuit Interrupter (GFCI) Protection

Bathroom receptacles (E3902.1): All 125-volt, single-phase, 15- and 20-ampere receptacles installed in bathrooms shall have ground-fault circuit-interrupter protection for personnel.

Location of ground-fault circuit interrupters (E3902.11): Ground-fault circuit interrupters shall be installed in a readily accessible location.

Garage and accessory building receptacles (E3902.2): All 125-volt, single-phase (including receptacle for any garage door operator), 15- or 20-ampere receptacles installed in garages and grade-level portions of unfinished accessory buildings used for storage or work areas shall have ground-fault circuit-interrupter protection for personnel.

Outdoor receptacles (E3902.3): All 125-volt, single-phase, 15- and 20-ampere receptacles installed outdoors shall have ground-fault circuit-interrupter protection for personnel.

Exception: Receptacles as covered in Section E4101.7.

Crawl space receptacles (E3902.4): Where a crawl space is at or below grade level, all 125-volt, single-phase, 15- and 20-ampere receptacles installed in such spaces shall have ground-fault circuit-interrupter protection for personnel.

Unfinished basement receptacles (E3902.5): All 125-volt, single-phase, 15- and 20-ampere receptacles installed in unfinished basements shall have ground-fault circuit-interrupter protection for personnel. For purposes of this section, unfinished basements are defined as portions or areas of the basement not intended as habitable rooms and limited to storage areas, work areas, and the like.

Exception: A receptacle supplying only a permanently installed fire alarm or burglar alarm system.

Kitchen receptacles (E3902.6): All 125-volt, single-phase, 15- and 20-ampere receptacles that serve countertop surfaces shall have ground-fault circuit-interrupter protection for personnel.

Sink receptacles (E3902.7): All 125-volt, single-phase, 15- and 20-ampere receptacles that are located within 6 feet of the outside edge of a sink that is located in an area other than a kitchen, shall have ground-fault circuit interrupter protection for personnel. Receptacle outlets shall not be installed in a face-up position in the work surfaces or countertops.

Location of ground-fault circuit interrupters (E3902.11): Ground-fault circuit interrupters shall be installed in a readily accessible location.

Arc Fault Circuit Interrupter Protection

Arc-fault circuit-interrupter protection (E3902.12): All branch circuits that supply 120-volt, single-phase, 15- and 20-ampere outlets installed in family rooms, dining rooms, living rooms, parlors, libraries, dens, bedrooms, sunrooms, recreations rooms, closets, hallways and similar rooms or areas shall be protected by a combination type arc-fault circuit interrupter installed to provide protection of the branch circuit.

Exception:

1. Where an outlet branch-circuit type AFCI is installed at the first outlet to provide protection for the remaining portion of the branch circuit, the portion of the branch circuit between the branch-circuit overcurrent device and the first outlet shall be installed with metal outlet and junction boxes and RMC, IMC, EMT, type MC, or steel armored type AC cables meeting the requirements of Section E 3908.8.
2. Where an outlet branch-circuit type AFCI is installed at the first outlet to provide protection for the remaining portion of the branch circuit, the portion of the branch circuit between the branch-circuit overcurrent device and the first outlet shall be installed with metal or nonmetallic conduit or tubing that is encased in not less than 2 inches of concrete.
3. AFCI protection is not required for an individual branch circuit supplying only a fire alarm system where the branch circuit is wired with metal outlet and junction boxes and RMC, IMC, EMT or steel sheathed armored cable Type AC, or Type MC meeting the requirements of Section E3908.8.

Arc-fault circuit interrupter protection for branch circuit extensions or modifications (E3902.13): Where branch circuit wiring is modified, replaced, or extended in any of the areas specified in Section E3902.12, the branch circuit shall be protected by one of the following:

1. A combination-type AFCI located at the origin of the branch circuit
2. An outlet branch-circuit type AFCI located at the first receptacle outlet of the existing branch circuiting the requirements of Section E3908.8.

2012 IRC Significant Changes

Two-Family Dwelling Parapets	**R302.2.2**	See Page 50
Garage to House Opening Protection	**R302.5.1**	See Page 46
Safety Glazing	**R308.4**	See Page 21
Fire Sprinkler Systems	**R309 and P2904**	See Page 07
Floor Elevations at the Required Egress Door	**R311.3.1**	See Page 18
Carbon Monoxide Alarms	**R315**	See Page 07
Foundation Drainage	**R405.1**	See Page 16
Fire Protection of Floors	**R501.3**	See Page 26
Deck Ledger Connection to a Band Joist	**R507.2**	See Page 47
Fastener Schedule for Structural Members	**Table R602.3(1)**	See Page 30
Simplified Wall Bracing	**R602.12**	See Page 31
Masonry Veneer Lintel	**R703.7.3.2**	See Page 12
Cutting, Drilling and Notching of Roof Members	**R802.7**	See Page 39
Truss Design Drawings	**R802.10**	See Page 37
Roof Uplift Resistance	**R802.11**	See Page 39
Roof Ventilation	**R806**	See Page 43
Unvented Attic Assemblies	**R806.5**	See Page 44
Clothes Dryer Exhaust	**M1502**	See Page 49
Exhaust Ducts and Exhaust Openings	**M1506**	See Page 53
Above-Ground Duct Systems	**M1601.1**	See Page 54
Duct Joints, Seams and Connections	**M1601.4.1**	See Page 55
Rough Plumbing Test	**P2503.5.1**	See Page 57
Sealing of Annular Spaces	**P2606**	See Page 58
Supplemental Electrode Required	**E3608.4**	See Page 62
Receptacle Outlets in Foyers	**E3901.11**	See Page 63
Location of Ground Fault Circuit Interrupters	**E3902.11**	See Page 66
Boxes at Fan Outlets	**E3905.8**	See Page 63
Arc Fault Circuit Interrupter Protection	**E3902.12**	See Page 66
Switch and Faceplate Grounding	**E4001.11**	See Page 65
Switches Controlling Lighting Loads	**E4001.15**	See Page 64

2012 IRC Electrical Updated Changes

Garage and accessory building receptacles (E3902.2): All 125-volt, single-phase (including receptacle for any garage door operator), 15- or 20-ampere receptacles installed in garages and grade-level portions of unfinished accessory buildings used for storage or work areas shall have ground-fault circuit-interrupter protection for personnel. This includes any receptacle dedicated for a freezer or secondary refrigerator. In cases such as this, the use of a GFCI receptacle with an audible alarm would be helpful.

Pass & Seymour 1595 TRAWCC4

Bathroom receptacles (E3902.1): All 125-volt, single-phase, 15- and 20-ampere receptacles installed in bathrooms shall have ground-fault circuit-interrupter protection for personnel. This includes the dedicated circuit required for a jetted-tub. In the past, the installation of a GFCI receptacle located in an attached closet protecting the under tub receptacle was acceptable. This is no longer the case. The use of a dead front GFCI receptacle will be an acceptable alternative.

Pass & Seymour 2085W

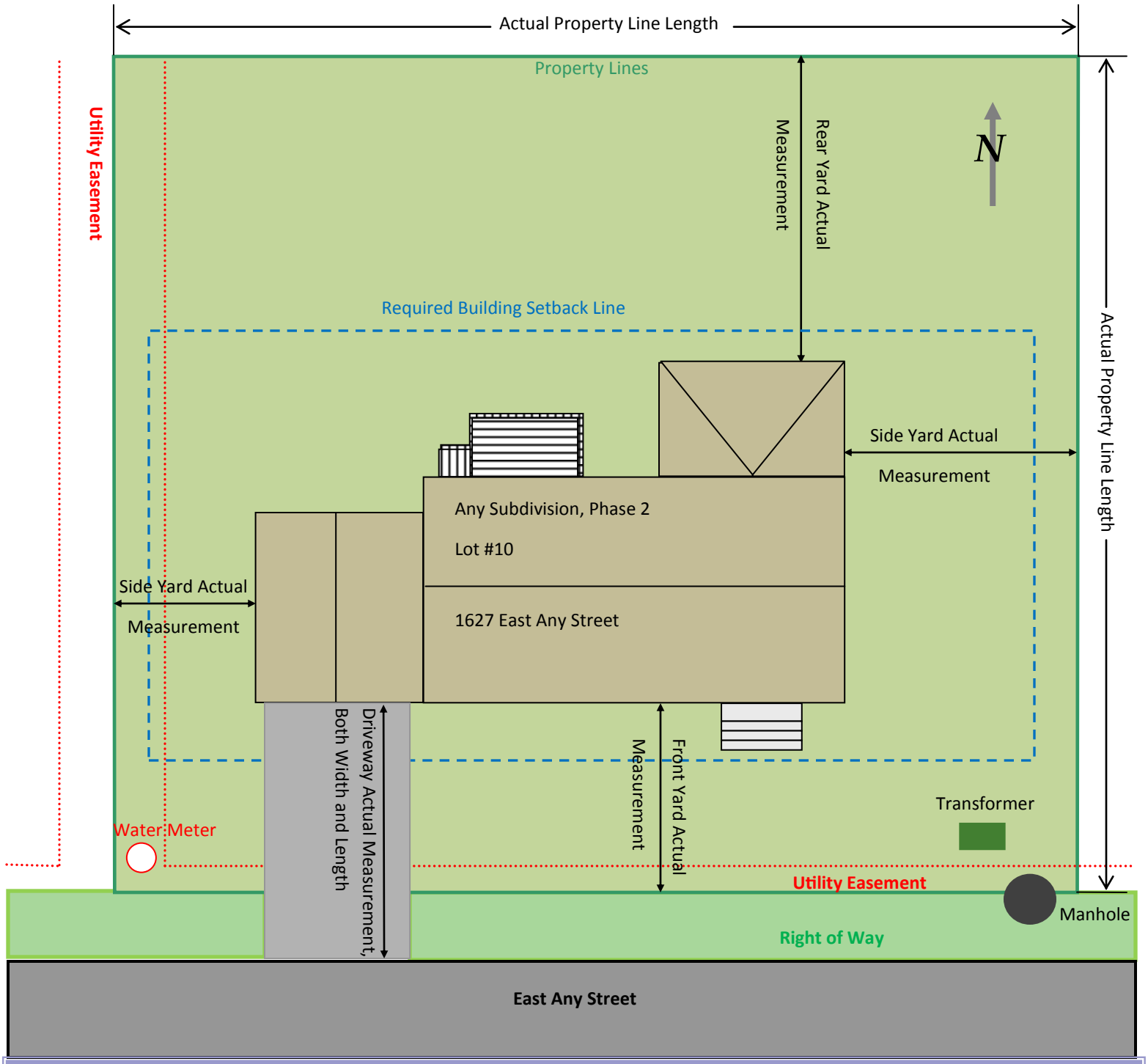

Site Plan Minimum Requirements

In addition to the Permit Application, the City requires an accurate floor plan and a site plan. Please see pages 18 and 19 of this packet for examples of acceptable and unacceptable site plan. The following information is required to be clearly stated on the site plans:

- Subdivision name, phase/addition number, lot number and street address
- The property lines and property dimensions
- Location and dimensions of front, side, and rear yard setbacks to the structure
- The location, size, and shape of all structures proposed for construction
- Location and dimension of all parking areas and driveways
- Location of any easements, floodplains, or other pertinent legal features that cross the property
- Any other relevant information that may be required to determine conformance with applicable regulations, such as manholes, water meter pits, light poles, etc.

If any part of the building is located in a flood plain, a flood plain development permit is required ***before*** any form of construction starts. This includes excavation or filling. An elevation certificate is required when the building is complete in order to verify finished floor elevation and issue a certificate of occupancy

Example of an Unacceptable Site Plan

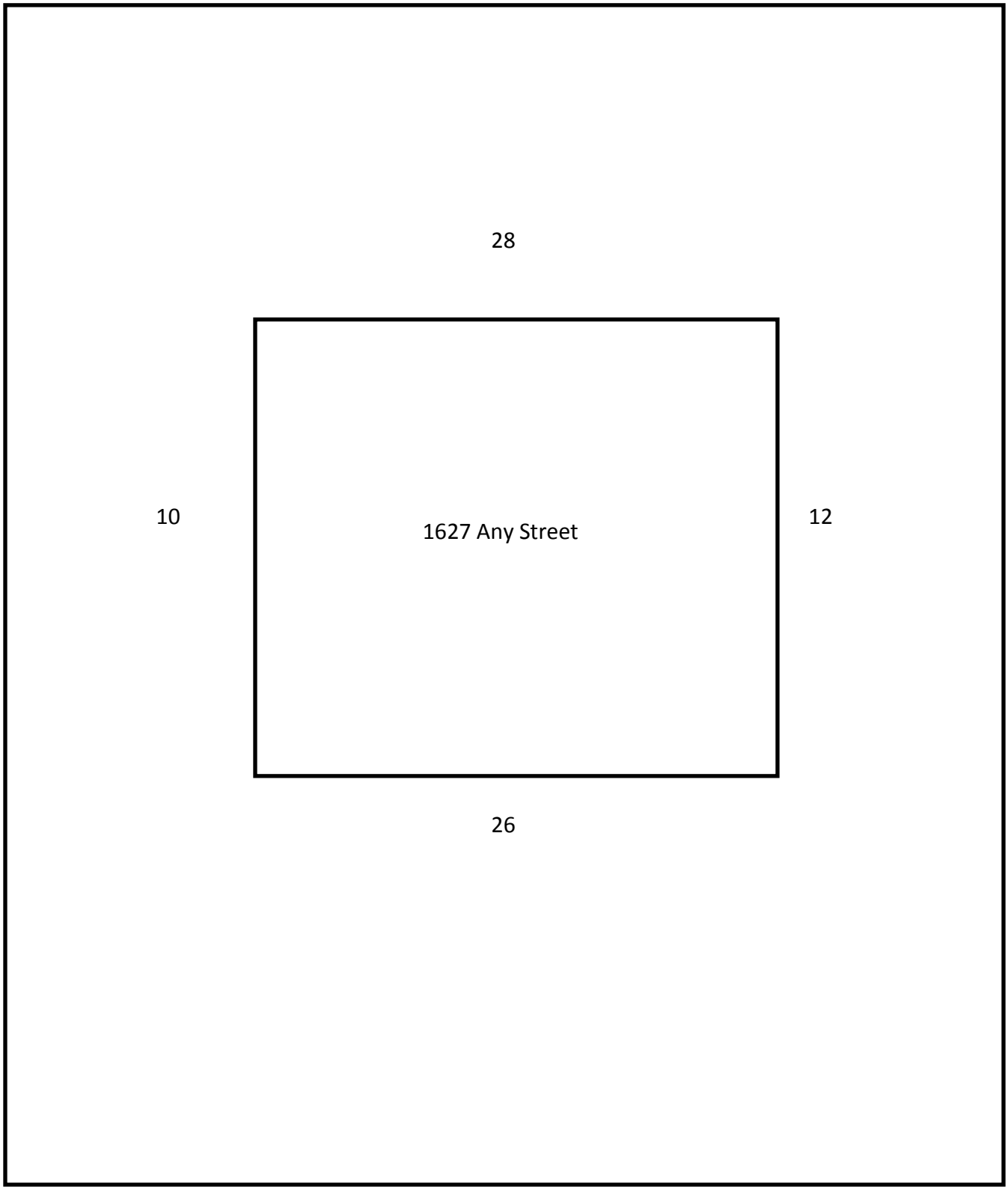

City of Republic

Primary Business Address
204 North Main Avenue
Republic, MO 65738-1473
Across from City Hall

Phone: 417-732-3150
Fax: 417-732-3199
E-mail: wzajac@republicmo.com

The Planning and Development Department is made up of five full-time employees including a Planning and Development Director, Administrative Assistant, Principal Planner, Building Inspector, and Code Compliance Official. Our office is located at 204 North Main Street. The goal of the department is to serve the citizens of Republic through pursuance, guidance, and assistance in the development of the City. This is accomplished through marketing and strategic planning accompanied by oversight and enforcement of the City's Building Codes, Zoning Codes and Subdivision Regulations.

We're on the Web!

Www.Republicmo.com

Planning and Development Department

REPUBLIC
MISSOURI
GROWING TOGETHER