City of Republic

Girder and Header Spans for Exterior Walls

Revision Date: November 2015

2012 IRC Table R502.5(1) – Girder Spans[a] and Header Spans[a] for Exterior Bearing Walls (Maximum spans for Douglas Fir-Larch, Hem-Fir, Southern Pine and Spruce-Pine-Fir[b] and Required Number of Jack Studs)

Girders and Headers Supporting	SIZE	Ground Snow Load = 30 (psf)[e]					
		Building Width[c] (feet)					
		20		28		36	
		Span	NJ[d]	Span	NJ[d]	Span	NJ[d]
Roof and Ceiling	2 each 2x4	3-6	1	3-2	1	2-10	1
	2 each 2x6	5-5	1	4-8	1	4-2	1
	2 each 2x8	6-10	1	5-11	2	5-4	2
	2 each 2x10	8-5	2	7-3	2	6-6	2
	2 each 2x12	9-9	2	8-5	2	7-6	2
	3 each 2x8	8-4	1	7-5	1	6-8	1
	3 each 2x10	10-6	1	9-1	2	8-2	2
	3 each 2x12	12-2	2	10-7	2	9-5	2
	4 each 2x8	9-2	1	8-4	1	7-8	1
	4 each 2x10	11-8	1	10-6	1	9-5	2
	4 each 2x12	14-1	1	12-2	2	10-11	2
Roof, Ceiling and One Center Bearing Floor	2 each 2x4	3-1	1	2-9	1	2-5	1
	2 each 2x6	4-6	1	4-0	1	3-7	2
	2 each 2x8	5-9	2	5-0	2	4-6	2
	2 each 2x10	7-0	2	6-2	2	5-6	2
	2 each 2x12	8-1	2	7-1	2	6-5	2
	3 each 2x8	7-2	1	6-3	2	5-8	2
	3 each 2x10	8-9	2	7-8	2	6-11	2
	3 each 2x12	10-2	2	8-11	2	8-0	2
	4 each 2x8	8-1	1	7-3	1	6-7	1
	4 each 2x10	10-1	1	8-10	2	8-0	2
	4 each 2x12	11-9	2	10-3	2	9-3	2
Roof, Ceiling and One Clear Span Floor	2 each 2x4	2-8	1	2-4	1	2-1	1
	2 each 2x6	3-11	1	3-5	2	3-0	2
	2 each 2x8	5-0	2	4-4	2	3-10	2
	2 each 2x10	6-1	2	5-3	2	4-8	2
	2 each 2x12	7-1	2	6-1	3	5-5	3
	3 each 2x8	6-3	2	5-5	2	4-10	2
	3 each 2x10	7-7	2	6-7	2	5-11	2
	3 each 2x12	8-10	2	7-8	2	6-10	2
	4 each 2x8	7-2	1	6-3	2	5-7	2
	4 each 2x10	8-9	2	7-7	2	6-10	2
	4 each 2x12	10-2	2	8-10	2	7-11	2

2012 IRC Table R502.5(1) – Continued

Girders and Headers Supporting	SIZE	Ground Snow Load = 30 (psf)[e]					
		Building Width[c] (feet)					
		20		28		36	
		Span	NJ[d]	Span	NJ[d]	Span	NJ[d]
Roof, Ceiling and Two Center Bearing Floors	2 each 2x4	2-7	1	2-3	1	2-0	1
	2 each 2x6	3-9	2	3-3	2	2-11	2
	2 each 2x8	4-9	2	4-2	2	3-9	2
	2 each 2x10	5-9	2	5-1	2	4-7	3
	2 each 2x12	6-8	2	5-10	3	5-3	3
	3 each 2x8	5-11	2	5-2	2	4-8	2
	3 each 2x10	7-3	2	6-4	2	5-8	2
	3 each 2x12	8-5	2	7-4	2	6-7	2
	4 each 2x8	6-10	1	6-0	2	5-5	2
	4 each 2x10	8-4	2	7-4	2	6-7	2
	4 each 2x12	9-8	2	8-6	2	7-8	2
Roof, Ceiling and Two Clear Span Floors	2 each 2x4	2-1	1	1-8	1	1-6	2
	2 each 2x6	3-1	2	2-8	2	2-4	2
	2 each 2x8	3-10	2	3-4	2	3-0	3
	2 each 2x10	4-9	2	4-1	3	3-8	3
	2 each 2x12	5-6	3	4-9	3	4-3	3
	3 each 2x8	4-10	2	4-2	2	3-9	2
	3 each 2x10	5-11	2	5-1	2	4-7	3
	3 each 2x12	6-10	2	5-11	3	5-4	3
	4 each 2x8	5-7	2	4-10	2	4-4	2
	4 each 2x10	6-10	2	5-11	2	5-3	2
	4 each 2x12	7-11	2	6-10	2	6-2	3

a. Spans are given in feet and inches.

b. Tabulated values assume #2 grade lumber.

c. Building width is measured perpendicular to the ridge. For widths between those shown, spans are permitted to be interpolated.

d. NJ = number of jack studs required to support each end. Where the number of required jack studs equals one, the header is permitted to be supported by an approved framing anchor attached to the full-height wall stud and to the header.

e. Use 30 psf ground snow load for cases in which ground snow load is less than 30 psf and the roof live load is equal to or less than 20 psf.

Definitions:

Girder: A large wood or steel beam used to support concentrated loads at various points along its length. In residential construction, a girder is a member supporting the floor joist or sub-floor.

Header: A structural member placed horizontally over a window, door or other framed opening to carry the load over that opening. A structural member placed perpendicular to the joists to which other joists are nailed in framing around a chimney, stairway, or other opening in a floor or a ceiling.

Allowable girder spans (R502.5): The allowable spans of girders fabricated of dimensional lumber shall not exceed the values set forth in Tables R502.5(1) and R502.5(2).

Bearing (R502.6): The ends of each joist, beam or girder shall have not less than 1 $^1/_2$ inches of bearing on wood or metal and not less than 3 inches on masonry or concrete except where supported by a 1 inch by 4 inch ribbon strip and nailed to the adjacent stud or by the use of approved joist hangers. The bearing on masonry or concrete shall be direct, or a sill plate of 2 inch minimum nominal thickness shall be provided under the joist, beam or girder. The sill plate shall provide a minimum nominal bearing area of 48 square inches.

Commentary: This section establishes minimum lengths of bearing for several alternative support systems to provide for the transfer of floor loads to supporting elements. These minimum requirements are based on anticipated loads and the allowable compressive stresses perpendicular to the grain for beam sizes and grades typical for wood frame construction in addition to consideration of shear failure of the masonry. For joists, beams or girders bearing on wood or metal, the minimum bearing shown in Figure R502.6(1) must be provided.

As an alternative, the members may be supported by a 1 inch by 4 inch ribbon strip when joists are nailed to adjacent studs as shown in Figure R502.6(3) or by the use of approved joist hangers as shown in Figure R502.6(4).

When joists, beams or girders bear on masonry, a minimum bearing of 3 inches is required, as shown in Figure R502.6 (2).

Where joists, beams or girders span across masonry or concrete piers, full bearing of not less than 3 inches directly on the masonry or concrete pier is required. The code permits a sill plate of 2 inch minimum nominal thickness in lieu of bearing directly on the masonry or concrete. This will allow for the condition where the elevation of the top of pier is below the elevation of the bottom of the joist, beam or girder and the joist, beam or girder is not bearing directly on the masonry or concrete. The minimum nominal bearing area of 48 square inches is required to provide a bearing area on top of hollow masonry walls or piers.

Floor Systems (R502.6.1): Joists framing from opposite sides over a bearing support shall lap a minimum of 3 inches and shall be nailed together with a minimum three 10d nails. A wood or metal splice with strength equal or greater than that provided by the nailed lap is permitted.

Commentary: To provide a concentric application of load from the joist to supporting beams or girders, joists framing from opposite sides of a beam or girder are required to lap at least 3 inches or the opposing joists are to be tied together with a wood or metal splice.

Joist framing (R502.6.2): Joists framing into the side of a wood girder shall be supported by approved framing anchors or on ledger strips not less than nominal 2 inches by 2 inches.

Commentary: For joists framed into the side of a wood beam or girder, the joists must be supported by approved framing anchors, as shown in Figure R502.6.2(1) or by ledger strips having a minimum nominal dimension of 2 inches, as shown in Figure R502.6.2(2).

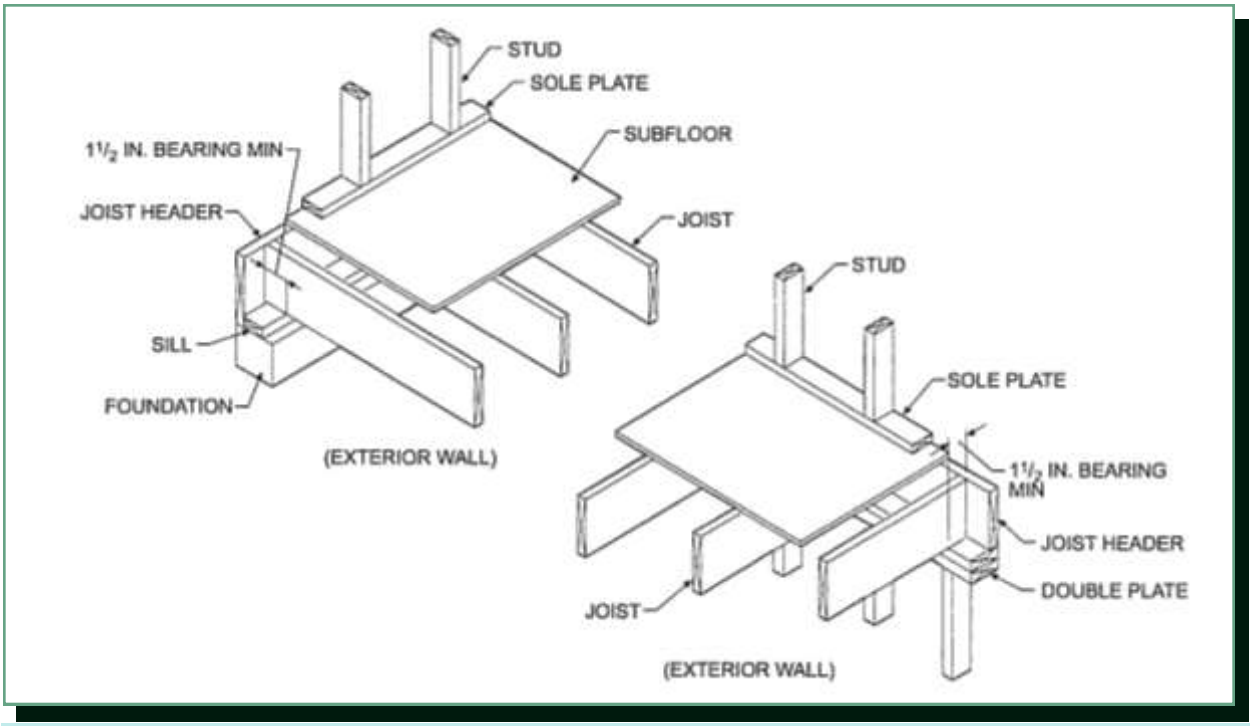

Figure R502.6(1) - Floor Joist Bearing on Wood

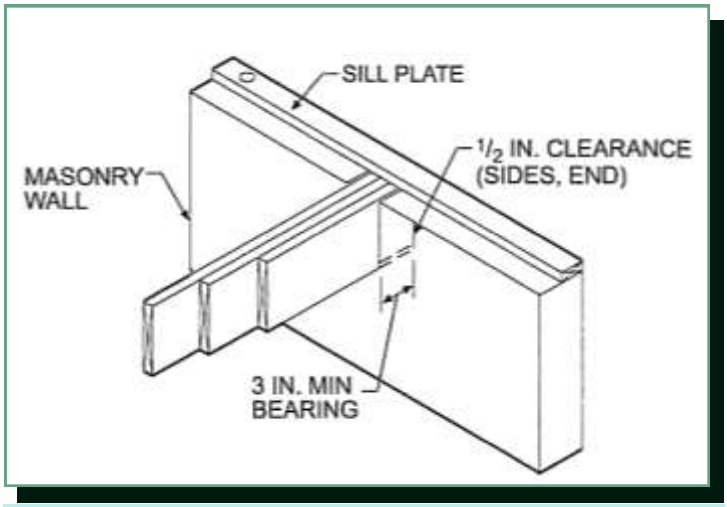

Figure R502.6(2) - Floor Joist Bearing on Masonry

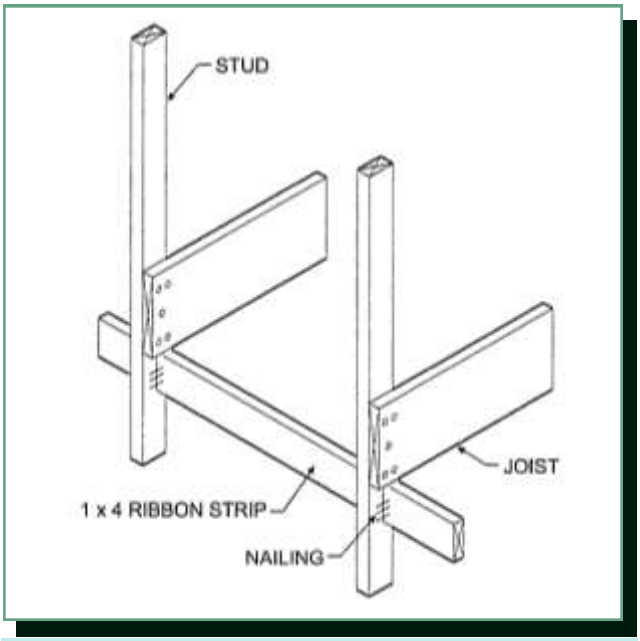

Figure R502.6(3) - Floor Joist Bearing on Ribbon Strip

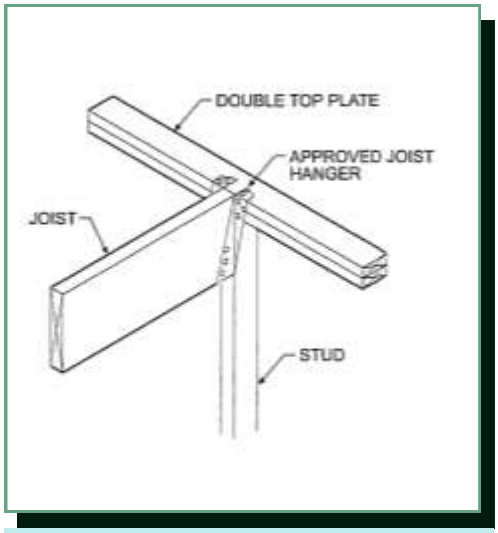

Figure R502.6(4) - Joist Hanger at Double Top Plate

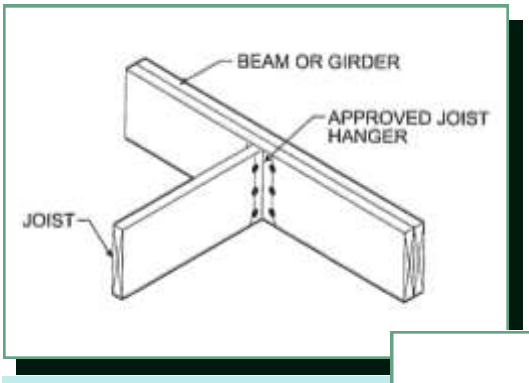

Figure R502.6.2(1) - Joist

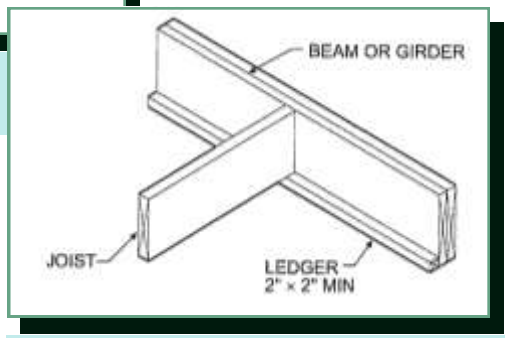

Figure R502.6.2(2) - Ledger Strips at Beam or Girder

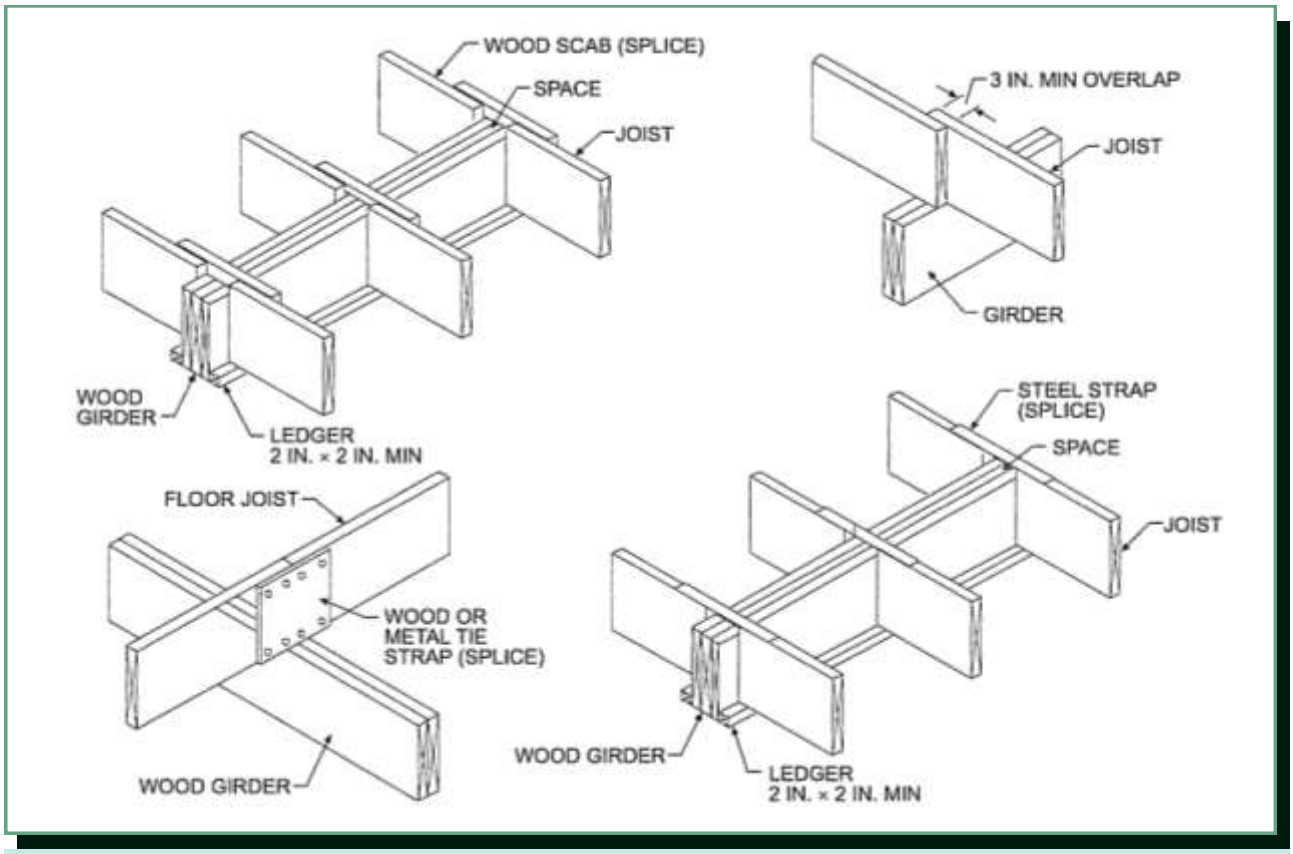

Figure R502.6.1—Joist at Girder

City of Republic

Primary Business Address
204 North Main Avenue
Republic, MO 65738-1473
Across from City Hall

Phone: 417-732-3150
Fax: 417-732-3199
E-mail: wzajac@republicmo.com

The Planning and Development Department is made up of five full-time employees including a Planning and Development Director, Administrative Assistant, Principal Planner, Building Inspector, and Code Compliance Official. Our office is located at 204 North Main Street. The goal of the department is to serve the citizens of Republic through pursuance, guidance, and assistance in the development of the City. This is accomplished through marketing and strategic planning accompanied by oversight and enforcement of the City's Building Codes, Zoning Codes and Subdivision Regulations.

We're on the Web!

Republicmo.com

Planning and Development Department

REPUBLIC
MISSOURI
GROWING TOGETHER