CONSTRUCTION SPECIFICATIONS FOR PUBLIC IMPROVEMENTS

REPUBLIC
MISSOURI
GROWING TOGETHER

September 2014 Edition

REPUBLIC, MISSOURI
CONSTRUCTION SPECIFICATIONS
FOR PUBLIC IMPROVEMENTS

	Pages
TABLE OF CONTENTS	i
LIST_OF_FIGURES	ii
PRIORITY AND ADOPTION	iii

Table of Contents

SECTION 01090 - DEFINITIONS AND STANDARDS..... 1

SECTION 01200 - PROJECT MEETINGS AND CERTIFICATION..... 1

SECTION 01300 – SUBMITTALS..... 1

SECTION 01530 - TEMPORARY BARRIERS AND CONTROLS..... 1

SECTION 02200 - SITE PREPARATION AND EARTHWORK..... 1

SECTION 02222 – TRENCHING AND BACKFILLING FOR UTILITIES..... 1

SECTION 02512 – ASPHALTIC CONCRETE PAVEMENT..... 1

SECTION 02525 - CURBS, GUTTERS, SIDEWALKS, MEDIAN, AND PAVED DRAINAGE..... 1

SECTION 02605 – MANHOLES AND WETWELLS..... 1

SECTION 02610 – SANITARY SEWER PIPE..... 1

SECTION 02615 - PRESSURE PIPE..... 1

SECTION 02620 - PIPE INSTALLATION AND TESTING..... 1

SECTION 02640 - VALVES, HYDRANTS AND ACCESSORIES..... 22

SECTION 02675 – DISINFECTION OF PIPING..... 1

SECTION 02720 – STORM DRAINAGE SYSTEM..... 1

SECTION 02831 - CHAIN-LINK FENCES AND GATES..... 1

SECTION 02930 – SEEDING AND SODDING..... 1

SECTION 03200 – CONCRETE REINFORCEMENT..... 1

SECTION 03300 – CONCRETE..... 1

SECTION 11152 - WETWELL MOUNTED WASTEWATER PUMPING STATION..... 1

SECTION 12000 – RIGHT-OF-WAY TECHNICAL SPECIFICATIONS..... 1

LIST OF FIGURES

Figure 1: EMBEDMENT OF PIPE FIGURE 02222-1
Figure 2: ASPHALT STREET REPAIR
Figure 3: CONCRETE STREET REPAIR FIGURE 02222-3
Figure 4: BORE-ENCASEMENT DETAILS FIGURE 02222-4
Figure 5: TYPICAL STREET SECTIONS FIGURE 02512-1
Figure 6: CONCRETE CURB AND GUTTER FIGURE 02525-1
Figure 7: CONCRETE SIDEWALK AND DRIVEWAY FIGURE 02525-2
Figure 8: CURB RAMP WITH DETECTABLE WARNING FIGURE 02525-3
Figure 9: CURB RAMP TYPE I FIGURE 02525-4
Figure 10: CURB RAMP TYPE II FIGURE 02525-5
Figure 11: CONCRETE JOINT DETAILS FIGURE 02525-6
Figure 12: STANDARD MANHOLE DETAIL FIGURE 02605-01
Figure 13: STANDARD OUTSIDE DROP MANHOLE DETAIL FIGURE 02605-2
Figure 14: STANDARD INSIDE DROP MANHOLE DETAIL FIGURE 02605-3
Figure 15: TYPE A MANHOLE FRAME AND LID FIGURE 02605-4
Figure 16: TYPE B MANHOLE FRAM AND LID FIGURE 02605-5
Figure 17: TYPE C MANHOLE FRAME AND LID FIGURE 02605-6
Figure 18: TYPICAL SHALLOW MANHOLES FIGURE 02605-7
Figure 19: THRUST BLOCK DETAIL FIGURE 02620-1
Figure 20: STANDARD SEWER SERVICE CONNECTION FIGURE 02620-2
Figure 21: WATER SERVICE DETAIL FIGURE 02620-3
Figure 22: RESIDENTIAL WATER METER BOX INSTALLATION FIGURE 02620-4
Figure 23: FLUSH VALVE ASSEMBLY FIGURE 02620-5
Figure 24: SLOPE ANCHOR FIGURE 02620-6
Figure 25: FIRE HYDRANT DETAIL FIGURE 02640-1
Figure 26: BACKFLOW PREVENTER IN EXT UG VAULT FIGURE 02640-2
Figure 27: CURB INLETS 18" OR LESS FIGURE 02720-1
Figure 28: CURB INLET 21" OR GREATER FIGURE 02720-2
Figure 29: TOP SLAB REINFORCEMENT FIGURE 02720-3
Figure 30: RING AND COVER FOR CURB INLETS FIGURE 02720-4
Figure 31: CONCRETE CULVERT CAP-DRIVEWAYS FIGURE 02720-5

PRIORITY AND ADOPTION

These Construction Specifications, dated September 2014, supersede all others and, to the extent that any previous specification, rule, regulation, policy or past practice, written or unwritten, is in conflict with the provisions of these specifications, such is hereby withdrawn, voided and all Parties shall conduct themselves in conformity with these Specifications.

_____
David Brock, Public Works Director

CERTIFICATE OF APPROVAL BY THE CITY COUNCIL OF THE CITY OF REPUBLIC, MISSOURI:

I, Brenda Jackson, City Clerk of the City of Republic, Greene County, Missouri, do hereby certify that these Construction Specifications were presented to, accepted and approved by the City Council of said City of Republic (Ordinance No. _____) on the _____ day of _____, 20__.

_____
Brenda Jackson, City Clerk

MISSOURI DEPARTMENT OF NATURAL RESOURCES

Review #53527-05 Public Drinking Water

Approved 12/19/14 Water Pollution Control

SECTION 01090 - DEFINITIONS AND STANDARDS

PART 1 - GENERAL

1.01 DEFINITIONS:

A. Basic definitions of general terms used in these Construction Specifications for Public Improvements are covered in this Section.

1. Agreement: The agreement, written contract or otherwise, between Developer and Contractor covering the Work to be performed and including any Public Improvements. The City shall not be a party to the Agreement between the Developer and the Contractor.

2. City: The City of Republic, Missouri. The governmental entity which will assume ownership of the completed Public Improvements Work from the Developer/Owner following the City's inspection of the completed Public Improvements Work and finding that the completed Public Improvements Work meets all the requirements set forth by the City for the construction of public improvements in the City of Republic, Missouri.

3. City Public Works Department: The City of Republic, Missouri, department representing the City during all phases of the Project. The Public Works Department shall be the designated contact between the Developer and the City. The Public Works Department will perform reviews of Developer submitted infrastructure construction drawings, will conduct periodic and final inspections of the Public Improvements Work, and will issue notices of approval and acceptance, when appropriate, of the Public Improvements Work.

4. Contractor: Any person, firm or corporation with whom the Developer/Owner enters into an Agreement to perform the Work for the Project, including any Public Improvements.

5. Developer/Owner: The person, firm, or corporation owning the property being developed and owning the Public Improvements Work until the Public Improvements Work is completed, approved and accepted by the City. The person, firm, or corporation who will transfer ownership of the Public Improvements Work to the City upon completion of the Public Improvements Work and the approval and acceptance thereof by the City.

6. Engineer, Engineer of Record, Developer's Engineering Consultant, Developer's Engineering Representative: The person, firm, or corporation, licensed to perform engineering services in the State of Missouri, whom the Developer/Owner employs to prepare drawings and specifications covering the Work, including any Public Improvements, and whom the Developer may designate as a representative to communicate with the Public Works Department.

7. Project: The total construction of which the Work to be provided under the Construction Specifications may be the whole, or part as indicated elsewhere in the Construction Specifications or on the City approved construction drawings.

8. Right of Way Manager: The appropriate governmental entity responsible for the management and oversight of a public right of way affected by the proposed work. For the City of Republic roads the Public Works Director or his designee. For County roads the Greene County Highway Department Administrator or his designee. For State roads the Missouri Department of Transportation Southwest District, District Engineer or his designee.

9. Work: The entire completed construction of the various separately identifiable parts thereof required to be furnished under the Construction Specifications and the City approved construction drawings. Work includes and is the result of performing or furnishing labor and furnishing and incorporating materials and equipment into the construction, and performing or furnishing services and furnishing documents, all as required by the Construction Specifications.

1.02 SPECIFICATION FORMAT AND CONTENT EXPLANATIONS:

A. Specification Format: The Construction Specifications are organized into Divisions and Sections based on the Construction Specifications Institute's (CSI) 16 - Division format and Master format numbering system. Some portions may not fully comply and no particular significance will be attached to such compliance or noncompliance.

1. Divisions and Sections: For convenience, a basic unit of Construction Specification Text is a "Section," each unit of which is numbered and named. These are recognized as the present industry consensus on uniform organization and sequencing of specifications. The Section title is not intended to limit meaning or content of Section, nor to be fully descriptive of requirements specified therein, nor to be an integral part of text.

2. Section Numbering: Used for identification and to facilitate cross-references in Construction Specifications. Sections are placed in numeric sequence; however, numbering sequence is not complete, and listing of Sections in Table of Contents at beginning of Construction Specifications must be consulted to determine numbers and names of Specification Sections in these Construction Specifications.

3. Page Numbering: Numbered independently for each Section. Section number is shown with page number at bottom of each page, to facilitate location of text.

4. Parts: Each Section of Construction Specifications generally has been subdivided into three basic "parts" for uniformity and convenience (PART 1 - GENERAL, PART 2 - PRODUCTS, and PART 3 - EXECUTION). These "Parts" do not limit the meaning of text within. Some Sections may not contain all three "Parts" when not applicable, or may contain more than three "Parts" to add clarity to organization of Section.

5. Underscoring of Titles: Used strictly to assist reader of Specification in scanning text for key words in content. No emphasis on or relative importance is intended except where underscoring may be used in body of text to emphasize a duty, critical requirement, or similar situation.

B. Specification Content:

1. These Construction Specifications use certain conventions in the use of language and the intended meaning of certain terms, words, and phrases when used in particular situations or circumstances. These conventions are explained as follows:

   a. Imperative and Streamlined Language: These Specifications are written in imperative and abbreviated form. This imperative language of the technical Sections is directed at the Contractor, unless specifically noted otherwise. Incomplete sentences shall be completed by inserting "shall," "the Contractor shall," and "shall be," and similar mandatory phrases by inference in the same manner as they are applied to notes on the Drawings. The words "shall be" shall be supplied by inference where a colon (:) is used within sentences or phrases. Except as worded to the contrary, fulfill (perform) all indicated requirements whether stated imperatively or otherwise.

   b. Specifying Methods: The techniques or methods of specifying requirements varies throughout the text, and may include "prescriptive," "compliance with standards," "performance," "proprietary," or a combination of these. The method used for specifying one unit of Work has no bearing on requirements for another unit of Work.

   c. Abbreviations: Throughout the Construction Specifications are abbreviations implying words and meanings which shall be appropriately interpreted. Specific abbreviations have been established, principally for lengthy technical terminology. These are normally defined at first instance of use. Organizational and associated names and titles of general standards are also abbreviated.

1.03 STANDARDS AND ABBREVIATIONS:

A. Applicability of Standards: Except where the Construction Specifications include more stringent requirements, applicable construction industry standards have the same force and effect as if bound or copied directly into the Construction Specifications. Such standards are made a part of the Construction Specifications by reference and are stated in each section.

1. Referenced standards, referenced directly in Construction Specifications or by governing regulations, have precedence over nonreferenced standards which are recognized in industry for applicability to the Work.

2. Where an applicable code or standard has been revised and reissued after the date of the Construction Specifications and before performance of Work affected, the revised or reissued code or standard shall apply.

3. Where compliance with two or more standards is specified, and they establish different or conflicting requirements for minimum quantities or quality levels, the most stringent requirement will be enforced, unless the Construction Specifications indicate otherwise. Refer requirements that are different but apparently equal, and uncertainties as to which quality level is more stringent, to the City for a decision before proceeding.

4. In every instance the quantity or quality level shown or specified shall be the minimum to be provided or performed. The actual installation may comply exactly, within specified tolerances, with the minimum quantity or quality specified, or it may exceed that minimum within reasonable limits. In complying with these requirements, indicated numeric values are minimum or maximum values, as noted, or appropriate for the context of the requirements. Refer instances of uncertainty to the City for a decision before proceeding.

5. Each entity engaged in construction on the Project is required to be familiar with industry standards applicable to that entity's construction activity. Copies of applicable standards are not bound with the Construction Specifications.

   a. Where copies of standards are needed for performance of a required construction activity, the Contractor shall obtain copies directly from the publication source.

   B. Abbreviations and Names: Trade association names and titles of general standards are frequently abbreviated. Where such acronyms or abbreviations are used in the Specifications, they mean the recognized name of the trade association, standard generating organization, authority having jurisdiction, or other entity applicable to the context of the text provision.

PART 2 - PRODUCTS - NOT APPLICABLE.

PART 3 - EXECUTION - NOT APPLICABLE.

END OF SECTION 01090

SECTION 01200 - PROJECT MEETINGS AND CERTIFICATION

PART 1 - GENERAL

1.01 SUMMARY: This Section includes the following requirements:

A. Project Meetings:

1. Preconstruction conference.

B. Certification:

1. Engineer’s Final Certification of Completion.

1.02 PROJECT MEETINGS

A. Preconstruction Conference:

1. Public Works Department will administer a meeting prior to commencement of any improvements to establish a working understanding between the parties as to their relationships during conduct of the Work.

2. Preconstruction conference shall be attended by:

a. Contractor and his superintendent.

b. Representatives of principal Subcontractors and Suppliers.

c. Public Works Department staff.

d. Developer/Owner or his representative.

3. Agenda:

a. Projected construction schedules.

b. Critical Work sequencing.

c. Project coordination.

d. Procedures and Processing of:

(1) Field decisions.

(2) Substitutions.

(3) Submittals.

e. Procedures for testing.

f. Procedures for maintaining record documents.

4. Location of Meeting: Republic City Hall, 221 N. Main Street.

1.03 CERTIFICATION:

A. Engineer's Final Certification of Completion:

1. The Engineer of Record shall perform site inspections as necessary to provide the City with a Certificate of Completion. Certificate shall state that all improvements have been constructed in general compliance with the City approved construction drawings and City Construction Specifications. Certificate of Completion shall bear the name, signature, current date and Missouri Registration Number of the Engineer.

2. Upon completion of the sanitary sewer line the Engineer of Record shall submit a copy of the duly executed "Application for Letter of Authorization" along with all testing data to the City of Republic and to the Missouri Department of Natural Resources. Upon the City's receipt of the Letter of Authorization from Missouri Department of Natural Resources the sanitary sewer line will be allowed to be placed in service.

3. Upon completion of the water main the Engineer of Record shall submit a copy of the duly executed "Application for Water Main Extension - Final Construction Approval" along with all testing data to the City of Republic and to the Missouri Department of Natural Resources. Upon the City's receipt of the Final Construction Approval from Missouri Department of Natural Resources the water main will be allowed to be placed in service.

PART 2 - PRODUCTS - Not applicable.

PART 3 - EXECUTION - Not applicable.

END OF SECTION 01200

SECTION 01300 – SUBMITTALS

PART 1 - GENERAL

1.01 SUMMARY:

A. This Section includes definitions, descriptions, transmittal, review of "Compliance" Submittals, and record drawings.

B. Related Work Specified Elsewhere:

1. Project Meetings: SECTION 01200.

1.02 GENERAL INFORMATION:

A. Definitions:

1. Compliance Submittals include shop drawings and product data which are prepared by the Contractor, Subcontractor, manufacturer, or Supplier and submitted by the Contractor to the Engineer as a basis for approval of the use of EQUIPMENT AND MATERIALS proposed for incorporation in the Work or needed to describe installation, operation, maintenance, or technical properties.

a. Shop drawings include custom-prepared data of all types including drawings, diagrams, material schedules, templates, instructions, and similar information not in standard printed form applicable to other projects.

b. Product data includes standard printed information on materials, products and systems; not custom-prepared for this Project, other than the designation of selections from available choices.

2. Contractor shall maintain in a safe place at the site one record copy of all Drawings, Specifications, and Addenda in good order and annotated to show all changes made during construction. Upon completion of the Work, these record documents will be delivered to the Engineer of Record who shall provide reproducible copies of the revised drawings to the City.

3. Refer to ARTICLE 1.03 of this Part for detailed lists of documents and specific requirements.

B. Quality Requirements:

1. Submittals such as shop drawings and product data shall be of the quality for legibility and reproduction purposes. Every line, character, and letter shall be clearly legible. Drawings such as reproducibles shall be usable for further reproduction to yield legible hard copy.

2. Documents shall be submitted to the Engineer for review. Any variations from specified materials/equipment/procedures shall be approved by the City. One copy of each Engineer "Approved" shop drawing shall be submitted to the City upon completion of the work. Any unapproved material/equipment shall be removed and replaced with material/equipment specified herein.

C. Language and Dimensions:

1. All words and dimensional units shall be in the English language.

2. Metric dimensional unit equivalents may be stated in addition to the English units.

D. Submittal Completeness:

1. Submittals shall be complete with respect to dimensions, design criteria, materials of construction, and other information specified to enable Engineer to review the information effectively.

1.03 COMPLIANCE SUBMITTALS:

A. Items shall include, but not be limited to, the following:

1. Manufacturer's specifications.

2. Catalogs, or parts thereof, of manufactured equipment.

3. Shop fabrication and erection drawings.

4. Concrete mix design information.

4. All drawings, catalogs or parts thereof, manufacturer's specifications and data, samples, instructions, and other information specified or necessary.

5. Record drawings.

PART 2 - PRODUCTS - Not applicable.

PART 3 - EXECUTION - Not applicable.

END OF SECTION 01300

SECTION 01530 - TEMPORARY BARRIERS AND CONTROLS

PART 1 - GENERAL

1.01 SUMMARY:

A. This Section includes General Requirements for:

1. Protection of Work.

2. Protection of existing property.

3. Barriers.

4. Environmental controls.

5. Traffic control and use of roadways.

B. Related Work Specified Elsewhere:

1. Site Preparation and Earthwork: SECTION - 02200.

2. Trenching and Backfilling for Utilities: SECTION - 02222.

PART 2 - PRODUCTS - Not Applicable.

PART 3 – EXECUTION

3.01 PROTECTION OF WORK AND PROPERTY:

A. General:

1. Provide protection at all times against rain, wind, storms, frost, freezing, condensation, or heat so as to maintain all Work and Equipment and Materials free from injury or damage. At the end of each day all new Work likely to be damaged shall be appropriately protected.

2. Notify Engineer immediately at any time operations are stopped due to conditions which make it impossible to continue operations safely or to obtain proper results.

3. Construct and maintain all necessary temporary drainage and do all pumping necessary to keep excavations, floors, pits, trenches, manholes, and ducts free of water.

B. Property Other than Developer’s/Owner’s:

1. Report immediately to the owners thereof and promptly repair damage to existing facilities resulting from construction operations.

2. Names and telephone numbers of representatives of agencies and utilities having jurisdiction over streets and utilities in the Work area can be obtained from the City for the agencies listed below. Concerned agencies or utilities shall be contacted a minimum of 48 hours prior to performing Work, closing streets and other traffic areas, or excavating near underground utilities or pole lines.

   a. Water.

   b. Gas.

   c. Sanitary sewers.

   d. Storm drains.

   e. Pipeline companies.

   f. Telephone.

   g. Electric.

   h. Municipal streets.

   i. Fire.

   j. Police.

   k. Right of Way Manager

3. Operation of valves or other appurtenances on existing utilities, when required, shall be by or under the direct supervision of the owning utility.

4. Where fences are to be breached on private property, the owners thereof shall be contacted and arrangements made to ensure proper protection of any livestock or other property thus exposed.

5. The applicable requirements specified for protection of the Work shall also apply to the protection of existing property of others.

6. Before acceptance of the Work by City, restore all property affected by Contractor's operations to the original or better condition.

3.02 BARRIERS

A. General:

1. Furnish, install, and maintain suitable barriers as required to prevent public entry, protect the public, and to protect the Work, existing facilities, trees, and plants from construction operations. Remove when no longer needed or at completion of Work.

   a. Barriers shall be required on all unattended excavations and at the direction of the Right of Way Manager

2. Materials may be new or used, suitable for the intended purpose, but must not violate requirements of applicable codes and standards or regulatory agencies.

3. Barriers shall be of a neat and reasonable uniform appearance, structurally adequate for the required purposes.

4. Maintain barriers in good repair and clean condition for adequate visibility.

5. Relocate barriers as required by progress of Work.

6. Repair damage caused by installation and restore area to original or better condition. Clean the area.

3.03 ENVIRONMENTAL CONTROLS:

A. Dust Control:

1. Provide positive methods and apply dust control materials to minimize raising dust from construction operations; and to prevent airborne dust from dispersing into the atmosphere.

B. Water and Erosion Control:

1. Provide methods to control surface water to prevent damage to the Project, the site, or adjoining properties.

2. Plan and execute construction and earthwork by methods to control surface drainage from cuts and fills, and from borrow and waste disposal areas, to prevent erosion and sedimentation.

   a. Hold the areas of bare soil exposed at one time to a minimum.

   b. Provide temporary control measures such as berms, dikes, drains and erosion barriers.

3. Control fill, grading, and ditching to direct surface drainage away from excavations, pits, tunnels, and other construction areas; and to direct drainage to proper runoff.

4. Provide, operate, and maintain hydraulic equipment of adequate capacity to control surface and groundwater.

5. Dispose of drainage water in a manner to prevent flooding, erosion, or other damage to any portion of the site or to adjoining areas.

C. Debris Control and Clean-Up:

1. Keep the premises free at all times from accumulations of debris, waste materials, and rubbish caused by construction operations and employees. Responsibilities shall include:

   a. Adequate trash receptacles about the site, emptied promptly when filled.

   b. Periodic cleanup to avoid hazards or interference with operations at the site and to maintain the site in a reasonably neat condition.

   c. The keeping of construction materials such as forms and scaffolding neatly stacked.

2. Prohibit overloading of trucks to prevent spillages on access and haul routes. Provide periodic inspection of traffic areas to enforce requirements.

D. Pollution Control:

1. Provide methods, means, and facilities required to prevent contamination of soil, water, or atmosphere by the discharge of hazardous or toxic substances from construction operations.

2. Provide equipment and personnel, perform emergency measures required to contain any spillages, and to remove contaminated soils or liquids. Excavate and dispose of any contaminated earth off-site in approved locations deemed acceptable by the appropriate regulatory agency, and replace with suitable compacted fill and topsoil.

3. Take special measures to prevent harmful substances from entering public waters, sanitary, or storm sewers or waters of the state.

3.04 TRAFFIC CONTROL AND USE OF ROADWAYS:

A. Traffic Control:

1. Provide, operate, and maintain equipment, services, and personnel, with traffic control and protective devices, as required to expedite vehicular traffic flow on haul routes, at site entrances, on-site access roads, and parking areas. This includes traffic signals and signs, flagmen, flares, lights, barricades, and other devices or personnel as necessary to adequately protect the public. Traffic control measures shall be reviewed and approved by the Right of Way Manager.

2. Remove temporary equipment and facilities when no longer required. Restore grounds to original, better, or specified condition when no longer required.

3. Provide and maintain suitable detours or other temporary expedients if necessary.

4. Bridge over open trenches where necessary to maintain traffic.

5. Consult with governing authorities to establish public thoroughfares which will be used as haul routes and site access. All operations shall meet the approval of owners or agencies having jurisdiction.

B. Maintenance of Roadways:

1. Repair roads, walkways, and other traffic areas damaged by operations. Keep traffic areas as free as possible of excavated materials and maintain in a manner to eliminate dust, mud, and hazardous conditions.

2. All operations and repairs shall meet the approval of owners or agencies having jurisdiction.

END OF SECTION 01530

SECTION 02200 - SITE PREPARATION AND EARTHWORK
PART 1 - GENERAL

1.01 SUMMARY:

A. This Section includes site preparation activities and certain items of earthwork common to other related Work.

B. Related Work Specified Elsewhere:

1. Trenching and Backfilling for Utilities: SECTION 02222.

1.02. REFERENCES:

A. Applicable Standards:

1. American Association of State Highway and Transportation Officials (AASHTO):

a. M80 - Coarse Aggregate for Portland Cement Concrete.

b. T104 - Soundness of Aggregate by Use of Sodium Sulfate or Magnesium Sulfate.

c. T180 - The Moisture-Density Relations of Soils Using a 10-Pound (4.54-kg) Rammer and an 18-Inch (457-mm) Drop.

2. American Society for Testing and Materials (ASTM):

a. D2167 - Test for Density and Unit Weight of Soil In-Place by Rubber-Balloon Method.

b. D2922 - Density of Soil and Soil-Aggregate In-Place by Nuclear Methods (Shallow Depth).

c. D4253 - Maximum Index Density of Soils Using a Vibratory Table.

d. D4254 - Minimum Index Density of Soils and Calculation of Relative Density.

e. C88 - Soundness of Aggregates by Use of Sodium Sulfate or Magnesium Sulfate.

f. D3786 - Test Method for Hydraulic Bursting Strength of Knitted Goods and Nonwoven Fabrics: Diaphragm Bursting Strength Test Method.

g. D4491 - Test Methods for Water Permeability of Geotextiles by Permittivity.

h. D4632 - Test Method for Grab Breaking Load and Elongation of Geotextiles.

i. D4751 - Test Method for Determining the Apparent Opening Size of a Geotextile.

j. D4833 - Test Method for Index Puncture Resistance of Geotextiles, Geomembranes, and Related Products.

k. D698 - Test Methods for Moisture-Density Relations of soil and Soil-Aggregate Mixtures, Using 5.5-lb (2.49-kg) Rammer and 12-in. (305-mm) Drop.

3. Occupational Safety and Health Administration (OSHA):

a. Part 1926 - Safety and Health Regulations for Construction.

PART 2 - PRODUCTS

2.01 EARTHWORK:

A. Materials suitable for use in embankment, structural backfill and fill include material free of debris, roots, organic matter, and frozen matter; and free of stone having any dimension greater than 2 inches in areas requiring a high degree of compaction or 4 inches in other embankment and fill areas:

1. Cohesionless materials include gravels, gravel-sand mixtures, sands, and gravelly sands exclusive of clayey material:

a. Free-draining.

b. Materials for which impact compaction will not produce a well-defined, moisture-density relationship curve.

c. Maximum density by impact methods will generally be less than by vibratory methods.

d. For which generally less than 15 percent by dry weight, of soil particles pass the No. 200 sieve.

2. Cohesive materials include silts and clays generally exclusive of sands and gravel:

a. Materials for which impact compaction will produce a well-defined, moisture-density relationship curve.

B. Materials unsuitable for use in embankment and fill include all material that contains debris, roots, organic matter, frozen matter, stone (with any dimension greater than 2 inches in areas requiring a high degree of compaction or 4 inches in other embankment and fill areas), or other materials that are determined by Engineer to be too wet or otherwise unsuitable.

C. Waste materials include excess usable materials and materials unsuitable for use in the Work.

D. Borrow materials include all fill materials, structural backfill and topsoil obtained from locations on or off the jobsite.

2.02 RIPRAP:

A. Riprap Material:

1. All stone shall be durable and of suitable quality to ensure permanence in the structure and in the climate in which it is to be used.

2. Boulders or quarried rock may be used and shall be graded as follows:

Weight in Pounds Per Stone	Percent of Total Weight Lighter Than or Passing
300	100
150	55-75
50	25-45
2-inch screen	5-15

3. Quantity of rock with an elongation greater than 3:1 shall not exceed 20% of the mass. No stone shall have an elongation greater than 4:1.

4. Stone shall be free from cracks, seams or other defects that would tend to increase its deterioration from natural causes.

5. Objectionable quantities of dirt, sand, clay, and rock fines will not be permitted.

6. Not more than 10% of the stone shall show splitting, crumbling, or spalling when subjected to five cycles of the sodium soundness test as required by AASHTO T104.
7. Contractor shall furnish a Sample of stone to Engineer for acceptance.

B. Bedding material for riprap shall conform to all applicable requirements of AASHTO M80 and shall be reasonably well-graded within the following limits:

Sieve Size	Percent Passing by Weight
4-inch	100
3-inch	80-100
2-inch	70-90
3/4-inch	45-60
No. 4	20-30
No. 10	5-15
No. 40	0-5

1. Crushed rock conforming to the gradation specified may be used.

2.03 STRUCTURAL BACKFILL:

A. Crushed rock conforming to the following gradation may be needed.

Sieve Size	Percent Passing by Weight
1-1/2-inch	100
1-inch	75-95
1/2-inch	55-75
No. 4	35-55
No. 10	25-45
No. 40	14-30
No. 200	4-10

B. Structural backfill material shall be subject to approval of the Engineer and arranged for by Contractor.

2.04 FILTER FABRIC:

A. Filter fabric of nonwoven geotextile conforming to:

1. D3786 - Mullen Burst of 225 psi and Greater.

2. D4491 - Permittivity of 2.5 Per Sec-1 with a Flow Rate of 175 Gallons Per Minute Per Square Foot Minimum.

3. D4632 - Tensile Strength 90 Lbs or Greater at 50% Elongation.

4. D4751 - Apparent Opening Size (AOS) of 70 on U.S. Sieve.

5. D4833 - Puncture 65 Lbs or Greater.

2.05 SOIL STERILANT:

A. Sterilant shall be Krovar as manufactured by E. I. Du Pont De Nemours and Co.

PART 3 - EXECUTION

3.01 SITE PREPARATION:

A. Clearing and Grubbing:

1. Perform selective clearing and grubbing as indicated or as necessary to perform excavation, trenching, embankment, borrow, and other Work required, and as directed by Engineer.

a. Clearing:

(1) Includes felling and disposal of trees, brush, and other vegetation.

(2) Conduct Work in a manner to prevent damage to property and to provide for the safety of employees and others.

(3) Keep operations within property lines as indicated.

b. Grubbing:

(1) Includes removal and disposal of tree stumps and roots larger than 3 inches in diameter.

(2) Remove to a depth of at least 18 inches below existing grade elevation.

(3) Backfill all excavated depressions with approved material and grade to drain.

B. Protection of Trees:

1. Protect tops, trunks, and roots of existing trees on Project site which are to remain, as follows:

a. Box fence around, or otherwise protect trees before any construction Work is started.

b. Do not permit heavy equipment or stockpiles within branch spread.

c. Trim or prune to obtain working space in lieu of complete removal when possible. Conduct operation as follows:

(1) With experienced personnel.

(2) Conform with good horticultural practice.

(3) Preserve natural shape and character.

(4) Protect cuts with approved tree paint.

d. Grade around trees as follows:

(1) Trenching: Where trenching is required around trees which are to remain, avoid cutting the tree roots by careful hand tunneling under or around the roots. Avoid injury to or prolonged exposure of roots.

(2) Raising Grades: Where existing grade at a tree is below the new finished grade and fill not exceeding 16 inches is required, place 1 to 2 inches of clean, washed gravel directly around the tree trunk. Extend gravel out from trunk on all sides at least 18 inches and finish 2 inches above finished grade at tree. Install gravel before earth fill is placed. Do not leave new earth fill in contact with any tree trunks.

(3) Lowering Grades: Regrade by hand to elevation required around existing trees in areas where new finished grade is to be lower. As required, cut the roots cleanly 3 inches below finished grade, and cover scars with tree paint.

e. Remove when damage occurs and survival is doubtful.

C. Stripping:

1. Remove topsoil from all areas within limits of the construction easement which are to be used for any purpose except for stockpiling excavated materials.

D. Debris:

1. Dispose of debris from clearing, grubbing, stripping, and demolition at a location off the jobsite as arranged for by Contractor.

3.02 EARTHWORK:

A. Excavation:

1. Perform excavation as indicated or as required to complete the work.

2. Normal materials to be excavated are earth and other materials which can be removed by power shovel, bulldozer, or other normal equipment, but not requiring the use of explosives or drills.

3. Blasting:

a. Drill and blast, including pre-split blasting, rock not removable by other excavation methods, in a manner that completes the excavation to lines indicated or acceptable and required for access, with the least disturbance to adjacent material.

b. Blasting shall be performed only by persons who are qualified, competent, and thoroughly experienced in the use of explosives for rock excavation.

c. Locate charge holes properly and drill to correct depth for charges used.

d. Limit charges in size to minimum required for reasonable removal of material by excavating equipment.

e. Determine spacing of drill holes, size of explosive charges, time delays and blasting techniques, including the use of approved explosion mats, to avoid excessive overbreak or damage to adjacent structures, equipment, utilities, or buried pipeline and conduit.

f. Contractor shall monitor blasting operations at necessary locations throughout all blasting activities. Peak particle velocities and/or displacements at adjacent structures, equipment, exposed or buried, pipelines and conduits shall not exceed the level of criteria as determined by United States Department of Interior, Bureau of Mines in their Figure B-1 from Report of Investigations 8507 by D.E. Siskind, et. al., unless otherwise directed by Engineer.

g. Contractor shall assume full liability for any damage to adjacent structures, equipment, new construction, utilities, or buried pipelines and conduit caused by blasting operations.

h. Blasting near utilities shall be subject to approval of owning agency.

i. Before delivery of any explosives at jobsite, Contractor must have obtained a blasting endorsement on his public liability and property damage insurance policy.

j. Remove overblast rock materials to competent rock and replace as directed by Engineer.

4. Dewatering:

a. Control grading around excavations to prevent surface water from flowing into excavation areas.

b. Drain or pump as required to continually maintain all excavations and trenches free of water or mud from any source, and discharge to approved drains or channels. Commence when water first appears and continue until Work is complete to the extent that no damage will result from hydrostatic pressure, flotation, or other causes.

c. Use pumps of adequate capacity to ensure rapid drainage of area, and construct and use drainage channels and subdrains with pumps as required.

d. Remove subgrade materials rendered unsuitable by excessive wetting and replace with approved backfill material.

5. Stockpiling:

   a. Stockpiling in amounts sufficient for and in a manner to segregate materials suitable for the following:

      (1) Topsoiling.

      (2) Constructing embankments and fills.

      (3) Backfilling.

      (4) Waste only.

   b. Do not obstruct or prevent access to:

      (1) Roads and driveways.

      (2) Utility control devices.

      (3) Ditches or natural drainage channels.

   c. Perform in a manner to avoid endangering the Work, stability of banks or structures, or health of trees and shrubs to be saved.

   d. Maintain safe distance between toe of stockpile and edge of excavation or trench.

   e. Stockpile in other areas or off site when adjacent structures, easement limitations, or other restrictions prohibit sufficient storage adjacent to the Work. Off-site areas shall be arranged for by Contractor and Developer/Owner.

6. Waste Materials:

   a. Remove waste materials from Work area as excavated.

   b. Deposit such materials in locations and within areas designated by Engineer and as indicated.

   c. Place excavated rock in the interior of waste area fills so that it will not be exposed to view.

d. Grade waste areas and leave them free draining and with an orderly and neat appearance.

B. Embankment:

1. Construct embankments to the contours and elevations indicated, using suitable Engineer approved material from excavations and borrow areas:

a. Borrow:

(1) Refers to all fill materials and topsoil obtained from Engineer approved locations off the jobsite.

(2) Borrow shall include all excavating, handling, and final disposal of materials as specified.

(3) Borrow areas shall be:

(a) Arranged for by Contractor.

(b) Subject to approval of the Engineer.

(4) Material removed from borrow areas shall be as approved by the Engineer.

(5) Leave borrow areas graded to drain and to present a neat appearance.

b. Compaction:

(1) Compact embankments using equipment as required to obtain reasonable uniformity.

(2) Compaction shall be as obtained by normal methods and equipment during the placing and grading of layers and to 95% of the maximum density.

(3) Moisture content shall be that required to obtain specified compaction of the soil:

(a) Perform any wetting or drying of the material as required to maintain moisture content at time of placement to not less than 4% below or more than 2% above optimum as determined by ASTM D698.

(4) Achieve minimum densities specified as referenced to:

(a) Cohesive Soils: Maximum density at optimum moisture, ASTSM D698.
(b) Cohesionless Soils: Relative density, ASTM D4253 and D4254.

c. Placement:

(1) Place fill material in 4-inch to 8-inch layers in areas requiring a high degree of compaction and in 8-inch to 12-inch layers in other embankment areas.

(2) Place embankment only on subgrades approved by Engineer.

(3) Do not place snow, ice, or frozen earth in fill; do not place fill on a frozen surface.

C. Subgrades:

1. Excavate or fill as required to construct subgrades to the elevations and grades indicated. Remove all unsuitable material and replace with Engineer approved fill materials. Perform all wetting, drying, shaping, and compacting required to prepare a suitable subgrade.

2. Subgrade for Fills and Embankment: Roughen by discing or scarifying. Wet or dry top 6 inches, as required, to bond with fill or embankment.

3. Subgrade for Roadways, Drives, Parking Areas, and Railroads:

a. Extend subgrade the full width of the roadbed plus 1 foot outside the edges of the overlying course to be placed.

b. Compact the top 6 inches of subgrades for traffic areas and railroads in embankment or excavation to 95%.

c. Subgrade shall be rolled (except those to receive aggregate-type surfacing).

d. Subgrade compaction shall be verified by in place moisture density testing and by proof rolling.

(1) Proof rolling shall be performed as directed by the City.

(2) Proof rolling shall be performed using a fully loaded single axle dump truck.

D. Site Grading:

1. Excavate, fill, compact fill, and rough grade to bring Project area outside of structures to subgrades as follows:

a. For surfaced areas, to underside of respective surfacing or base course:

(1) Prepare subgrades as specified in this Section.

b. For lawn and planted areas, to 4 inches below finished grade.

2. Rock:

a. Includes rock encountered in grading areas outside of structures.

b. Excavate rock to depths as follows:

(1) Under surfaced areas, to 6 inches below the top of respective subgrades.

(2) Under lawn and planted areas, to 24 inches below finished grade:

(a) Boulder or protruding rock outcrop shall be left undisturbed where indicated.

c. Backfill to grade with approved earth fill compacted-in-place:

(1) Achieve minimum density specified for particular location.

3. Fill:

a. Fill as required to raise existing grades outside of structure areas to the new grades as indicated.

b. Such fill shall be performed as specified in PART 3, paragraph 3.02, B. - Embankment, this Section.

c. Remove all debris subject to termite attack, rot, or corrosion from areas to be filled.

4. Rough Grading:

a. All areas within the Project, including excavated and filled sections, and adjacent transition areas shall be reasonably smooth, compacted, and free from irregular surface changes.

b. Degree of finish shall be that ordinarily obtained from blade grader or scraper operations, except as otherwise specified.

c. Finished rough grades shall generally be not more than 0.5 foot above or below established grade or approved cross sections with due allowance for topsoil and sod.

d. Tolerance for areas within 10 feet of structures and areas to be paved shall not exceed 0.15 foot above or below established subgrade.

e. Finish all ditches, swales, and gutters to drain readily.

f. Unless otherwise indicated, slope the subgrade evenly to provide drainage away from structure walls in all directions at a grade not less than 1/4 inch per foot.

g. Provide roundings at top and bottom of banks and at other breaks in grade.

E. Topsoiling:

1. Includes placement of topsoil on all areas not specified to receive paving or other surface treatment (including borrow or waste areas).

2. Materials:

a. Those obtained from excavation which are most suitable and stockpiles for such purpose:

(1) Topsoil shall be a fertile, friable, and loamy soil of uniform quality, free from materials such as hard clods, stiff clay, stone with any dimension greater than 1 inch, and similar impurities. Relatively free from grass, roots, weeds, and other objectionable plant material.

b. Borrow when required.

3. Subgrade Treatment:

a. Clear site of vegetation heavy enough to interfere with proper grading and tillage operations.

b. Clear surfaces of all stones or other objects larger than 3 inches in thickness or diameter, all roots, brush, wire, grade stakes, or other objectionable material.

c. Loosen subgrade by discing or scarifying to a depth of 2 inches wherever compacted by traffic or other causes to permit bonding of the topsoil to the subgrade.

4. Placement of Topsoil:

a. Distribute over required areas without compaction in upper 1 foot, other than that obtained with spreading equipment.

b. To extent material is available within following limits:

(1) Not less than 4 inches in depth.

(2) Do not exceed 2 feet in depth.

c. Shape cuts, fills, and embankments to contours indicated.

d. Grade to match contours of adjacent areas and permit good, natural drainage.

e. Provide gentle mound over trenches.

5. Maintenance:

a. After topsoil has been spread, clear surface of stones or other objects larger than 1 inch in thickness or diameter and all other objects than might interfere with planting and maintenance operations.

b. Protect topsoiled areas from the elements until grass is established and repair eroded areas as required.

c. Keep paved areas clean. Promptly remove topsoil or other dirt dropped upon surfacing.

3.03. RIPRAP:

A. Foundation Preparation:

1. Trim and dress areas requiring riprap to conform to cross sections indicated within an allowable tolerance of ±3 inches from the theoretical slope lines and grades.

2. Where such areas are below the allowable minus tolerance limit, they shall be brought to grade by filling with bedding material.

3. Do not place bedding on the base until the base has been approved.

B. Filter Blanket Placement:

1. Place filter blanket only on foundation approved by Engineer. Material for filter blanket shall consist of filter fabric meeting the requirements of this Section.

2. Filter fabric will be inspected by Engineer at the time of installation and will be rejected if damaged during manufacture, transportation or storage. The filter fabric shall be placed with its long dimension horizontal and shall be laid smooth and free of tension, stress, folds, wrinkles or creases.

   a. Strips shall be placed to provide not less than 18 inches of overlap at each joint.

   b. Contractor shall anchor filter fabric to prevent dislocation during placement of riprap. The method of anchoring shall be subject to the approval of the Engineer.

   c. Tracked or wheeled equipment will not be permitted on slopes covered with filter fabric.

   d. Filter fabric shall be left exposed no more than one week prior to riprap placement.

C. Placement of Riprap:

1. Place on the slopes within the limits as indicated.

2. Place stone for riprap on the prepared base in such a manner as to produce a reasonably well-graded mass of rock with a minimum practicable percentage of voids.

3. Place to its full course thickness in one operation in a manner to avoid displacing the bedding material.

4. Finished riprap shall be free from objectionable pockets of small stones and clusters of larger stones. Hand-place only if necessary to secure the desired results.

5. Maximum deviation from slope lines and grades indicated shall not exceed 6 inches. Maximum deviation shall not be continuous over an area greater than 10 square feet.

6. Maintain the riprap until accepted by City and replace any material displaced by any cause.

3.04 SOIL STERILANT:

A. Apply soil sterilant to the following areas:

1. Pump Station areas prior to placement of crushed rock surfacing.

2. Along base of fencing:

a. Width of treated area shall not exceed 12 inches.

B. Apply according to manufacturer's recommendations.

3.05 FIELD QUALITY CONTROL:

A. Compaction:

1. Developer/Owner will, through services of an independent laboratory, test all embankments, fills, structural backfill and subgrades under this Project to determine conformance with specified density relationships.

2. Method of test may be either of the following at Engineer's option:

a. ASTM D2167.

b. ASTM D2922.

B. Subgrades:

1. Engineer will inspect all subgrades to determine conformance with indicated lines and grades.

2. Subgrades for roadways, drives, parking areas, and railroads shall have a maximum deviation of not more than 1/2 inch in any 10 feet when tested with a 10-foot straightedge applied parallel with and at right angles to the centerlines of subgrade areas, except that subgrades to receive aggregate-type surfacing shall have a maximum deviation of not more than 1 inch.

3.06 PROTECTION OF THE WORK:

A. Maintenance:

1. Protect newly graded and topsoiled areas from actions of the elements.

2. Fill and repair settling or erosion occurring prior to landscaping and reestablish grades to the required elevations and slopes.

B. Correction of Backfill Settlement:

1. Developer is responsible for correcting any settlement of backfill and damages created thereby within 1 year after acceptance of the Work by the City.

2. Developer to make repairs within 10 days from and after due notification by City of backfill settlement and resulting damage.

3. Developer to make own arrangements for access to the site for purposes of repair.

END OF SECTION 02200

SECTION 02222 – TRENCHING AND BACKFILLING FOR UTILITIES

PART 1 – GENERAL

1.01 SUMMARY:

A. This Section includes:

1. Excavation, sheeting, bracing, and all operations necessary for the preparation of trenches for bedding of pipes and pipe appurtenances, conduit, and buried cable.

2. Pipe embedments and encasements.

3. Backfilling of trenches.

B. Related Work Specified Elsewhere:

1. Site Preparation and Earthwork: SECTION 02200.

2. Concrete: DIVISION 3.

C. See the following Standard Details at the end of this Section:

1. Embedment of Pipe.

2. Asphalt Street Repair.

3. Concrete Street Repair.

1.02 REFERENCES:

A. Applicable Standards:

1. American Association of State Highway and Transportation Officials (AASHTO):

a. T104 - Soundness of Aggregate by Use of Sodium Sulfate or Magnesium Sulfate.

2. American Society for Testing and Materials (ASTM):

a. D4253 - Maximum Index Density of Soils Using a Vibratory Table.

b. D4254 - Minimum Index Density of Soils and Calculation of Relative Density.

c. D2321 - Standard Practice for Underground Installation of Thermoplastic Pipe for Sewers and Other Gravity-Flow Applications

d. D2680 - Standard Specification for Acrylonitrile-Butadiene-Styrene (ABS) and Poly(Vinyl Chloride) (PVC) Composite Sewer Piping

3. Occupational Safety and Health Administration (OSHA):

a. Part 1926 - Safety and Health Regulations for Construction.

4. State of Missouri Standard Specifications for Highway Construction.

1.03 SUBMITTALS:

A. Submit as specified in DIVISION 1.

B. Includes, but not limited to, the following:

1. Steel reinforcement for concrete encasement.

2. Steel reinforcement for concrete cradle.

3. Concrete Submittals as specified in DIVISION 3.

C. Where selecting an option for excavation, trenching and shoring design from local, state, or federal safety regulations such as "OSHA Part 1926" or successor regulations, which request design by a registered professional engineer, the Contractor shall submit to the Engineer of Record (for information only and not for Engineer approval) the following:

1. Copies of design calculations and notes for sloping, benching, support systems, shield systems, and other protective systems approved by a professional engineer registered in the State of Missouri and obtained by Contractor.

2. Documents provided with evidence of Registered Professional Engineer's seal, signature, and date in accordance with appropriate State of Missouri licensing requirements.

PART 2 - PRODUCTS

2.01 GRANULAR PIPE EMBEDMENT:

A. Material:

1. Coarse Aggregate No. 1 of the State of Missouri Standard Specifications for Highway Construction.

2. Gravel or crushed stone which shall not have a loss of more than 15% after five cycles when tested for soundness with sodium sulfate as described in AASHTO T104.

B. Gradation:

Percent Passing	Sieve Size
100	3/4-inch
60-100	1/2-inch
0-5	No. 4

2.02 EARTH PIPE EMBEDMENT FOR GROUNDWATER BARRIER:

A. Barrier material shall be soil meeting classification GC, SL, CL, or ML-CL.

2.03 TRENCH BACKFILL MATERIALS:

A. Obtain from the following:

1. Trenches and other excavations included in the Project.

2. Borrow from location off jobsite.

3. As specified for pipe embedment.

4. Combination of above.

B. Free from organic matter, refuse, ashes, cinders, frozen, or other unsuitable material.

C. Gravel, rock, or shale particle size limited as follows:

1. Not to exceed 1 inch in greatest dimension within 12 inches of pipe or conduit and 2 inches in the upper 18 inches of trench.

2. Maximum dimension one-half the depth of layer to be compacted in other areas.

D. Contain sufficient fine materials to provide a dense mass free of voids and capable of satisfactory compaction.

E. Have moisture content enabling satisfactory placement and compaction.

F. Blended or otherwise processed to provide required gradation and moisture content.

G. Use granular material as specified for pipe embedment and trench stabilization unless otherwise indicated.

2.04 COMPACTED GRANULAR BACKFILL:

A. Compacted granular backfill shall be flowable fill or graded gravel as described below:

1. Flowable fill for compacted backfill shall be used for cuts in existing roadways, as approved by the City.

2. Gravel for compacted backfill shall conform to the following gradation.

Sieve Size	Percent Passing by Weight
1 inch	100
3/4 inch	85-100
3/8 inch	50-80
No. 4	35-60
No. 40	15-30
No. 200	5-10

3. The gravel mixture shall contain no clay lumps or organic matter.

2.05 ENCASEMENT OR CARRIER PIPE MATERIALS:

A. Smooth Steel Pipe:

1. Smooth wall casing conduit pipe shall be of welded steel construction and shall be new material with a minimum yield of 35,000 psi.

2. Smooth wall casing pipe shall have a wall thickness of at least .250 inch.

B. Carrier Pipe Spacers:

1. Clamp-on or bolt-on style stainless steel casing spacers with U.H.M.W. Polymer Plastic runners and neoprene liners.

PART 3 - EXECUTION

3.01 TRENCHING:

A. Equipment and Methods:

1. Types of Equipment and methods may be at Contractor's option, where structures or other facilities are not endangered.

2. Equipment and methods shall be subject to approval of jurisdictional agency where stability or usefulness of other facilities may be impaired.

3. Perform by hand methods when required to save or protect trees, culverts, utilities, or other structures above or below ground.

4. Maximum length of open trench shall be limited to 100 feet in advance and to 100 feet behind pipe installation, except as approved by Engineer.

B. Side Walls:

1. Make vertical or slope within specified trench-width limitations below a horizontal plane 12 inches above top of pipe.

2. Vertical or sloped (stepped) as required for stability, above a horizontal plane 12 inches above top of pipe.

3. Sheet and brace where necessary.

4. Excavate without undercutting.

C. Trench Depth:

1. Depth shall be sufficient to provide the minimum bedding requirements for the pipe being placed.

2. Do not exceed the indicated depth where conditions of bottom are satisfactory.

3. Increase depth as necessary to remove unsuitable supporting materials.

4. Minimum depth of cover over top of pipe is 42 inches.

5. Maximum depth of cover over top of pressure pipe shall be 72 inches.

D. Trench Bottom:

1. Protect and maintain when suitable natural materials are encountered.

2. Remove rock fragments and materials disturbed during excavation or raveled from trench walls.

3. Restore to proper subgrade with trench-stabilization material when over excavated:

a. Correct when trench is over excavated without authority or to stabilize bottom rendered unsuitable through negligence or improper operations.

b. Placement of Trench Stabilization Material:

(1) Compact in lifts not exceeding 6-inch loose thickness:

(a) With pneumatic or vibratory equipment.

(b) To density specified for granular pipe embedment.

(c.) Ledge rock, boulders, and large stones shall be removed to provide a minimum clearance of four inches (4") (10.16 cm) below and on each side of all pipe(s) with an outside diameter of sixteen inches (16”) and smaller when placed in a soil trench. Figure 02222-01 provides minimum trench depths for larger diameter pipes in a soil trench and for all pipes placed in a rock trench.

E. Trench Width:

1. Excavate trench to a width which will permit satisfactory jointing of the pipe and thorough tamping of the bedding.

2. Minimum trench width 18 inches.

3. Provide a minimum 4-inch clear space between outside diameter of pipe and trench wall for all pipe(s) with an outside diameter of sixteen inches (16”) and smaller when placed in a soil trench. Figure 02222-01 provides minimum trench widths for larger diameter pipes in a soil trench and for all pipes placed in a rock trench.

4. Maximum trench width shall be pipe outside diameter plus 24 inches.

F. Trenching in Fill Areas: Perform trenching in fill areas only after compacted fill has reached an elevation of not less than 1 foot above the top of the pipe.

3.02 PIPE EMBEDMENTS AND ENCASEMENTS: Class B bedding shall be used for all Polyvinyl Chloride (PVC) and Ductile Iron Pipe (DIP) pipelines. Class A arch encasement is not required unless improper trenching or unexpected trench conditions require its use.

A. Granular Pipe Embedment:

1. Place granular embedment as follows:

a. Level bottom layer at proper grade to receive and uniformly support pipe barrel throughout its length.

B. Plastic and Composite Pipe Embedment.

a. Embedment materials for bedding, haunching, and initial backfill, Classes I, II, or III, as described in ASTM D2321, shall be used and carefully compacted for all flexible pipe provided the proper strength pipe is used with the specified bedding to support the anticipated load based on the type of soil encountered and potential groundwater conditions

b. Except as described in ASTM D2680, the bedding, haunching, and initial backfill requirements for composite pipe shall be the same as for plastic pipe.

c. Form depression under each joint so that no part of bell or coupling is in contact with trench when pipe is placed in position.

d. Add second layer simultaneously to both sides of the pipe with care to avoid displacement.

e. Complete promptly after completion of jointing operations and Engineer approval to proceed.

f. Substitute for any part of earth backfill to within 2 feet of final grade at Contractor's option.

2. Compact granular bedding as follows:

a. In lifts not exceeding 12 inches in compacted depth.

b. Rod, space, or use pneumatic or vibratory equipment:

(1) As required to obtain not less than 80% relative density as determined by ASTM Method D4253 and D4254.

(2) Throughout depth of embedment.

3. See Standard Detail for Embedment of Pipe at the end of this Section.

C. Arch and Total Concrete Encasement:

1. Include in locations indicated or where approved by Engineer to correct over width trench condition.

2. Form to dimensions indicated or construct full width of trench.

3. Start and terminate encasement at a pipe joint:

   a. Exclude joints from encasement:

      (1) Applies only to joints at either end of encasement.

4. Install keyed construction joints coincident with pipe joints at 30- to 36-foot intervals. Provide separation of at least 75% of cross-section area at construction joints. Do not run horizontal steel through joint.

5. Suitably support and block pipe to maintain position and prevent flotation.

6. Place arch encasement promptly after installation of granular embedment.

7. Protect against damage from heavy equipment with layer of earth. Use hand methods to a horizontal plane 12 inches above top of encasement.

D. Concrete Cradle:

1. Include in locations indicated and where designated by Engineer to reinforce unstable trench bottom.

2. Place on undisturbed trench bottom or on stabilized sub base.

3. Form to dimensions indicated or construct full width of trench.

4. Start and terminate concrete cradle at a pipe joint:

   a. Exclude joints from cradle:

(1) Applies only to joints at either end of cradle.

5. Place without horizontal construction joints other than indicated.

6. Suitably support and block pipe to maintain position and prevent flotation.

E. Plastic and Composite Pipe Embedment

1. Plastic pipe. Embedment materials for bedding, haunching, and initial backfill, Classes I, II, or III, as described in ASTM D2321, shall be used and carefully compacted for all flexible pipe provided the proper strength pipe is used with the specified bedding to support the anticipated load based on the type of soil encountered and potential groundwater conditions.

2. Composite pipe. Except as described in ASTM D2680, the bedding, haunching, and initial backfill requirements for composite pipe shall be the same as for plastic pipe.

3. Provide anchorage where indicated.

F. Earth Pipe Embedment for Groundwater Barrier:

1. Include earth pipe embedment 20 feet upstream of each manhole for gravity lines and at intervals not to exceed 400 feet for pressure lines.

2. Use at impervious trench checks.

3. Shape trench bottom to fit the pipe and backfill throughout depth of trench with compacted impervious materials.

4. Soil shall be compacted to 95 percent of maximum density.

3.03 BACKFILLING:

A. Placement:

1. Complete promptly after Engineer approval to proceed:

a. Upon completion of pipe embedment.

b. Only after concrete encasement has obtained 70% of design strength. Determination of design-strength percentage obtained shall be as specified in DIVISION 3.

2. Use hand methods to a horizontal plane 12 inches above top of pipe-barrel conduit or duct banks.

3. Use approved mechanical methods where hand backfill is not required.

4. Place in layers of thickness within compacting ability of equipment used.

5. Until compacted depth over conduit exceeds 3 feet, do not drop fill material over 5 feet. Then distance may be increased 2 feet for each additional foot of cover. Backfill conduit trenches in layers of 4 to 8 inches.

B. Compacted Granular Backfill:

1. Compacted granular and flowable backfill (Section 02222-2.04) shall be required for the full depth of the trench above the embedment and to within six inches of finish grade or subgrade of pavements in the following locations, as approved by the City.

a. Where beneath pavements, driveways, curbs, parking lots, sidewalks.

b. Where in streets, roads, alleys or highway shoulders.

c. Where trench walls are within two feet of the back of the street curb.

2. The backfill shall be compacted by a suitable vibratory roller or platform vibrator to not less than 70 percent relative density as determined by ASTM D2049.

C. Temporary Street Repairs:

1. Reference is made to figure 0222-2 specifying temporary trench backfill measures required within streets, roads, alleys or highway shoulders

3.04 TUNNEL EXCAVATION: Pipelines shall be constructed in tunnels or bores in conformity with the following requirements.

A. Smooth Steel Casing Pipe:

1. Casing conduit shall be installed by jacking into place. Earth and/or rock displaced by the conduit shall be removed through the interior of the pipe by hand, auger or other acceptable means.

2. Sections of the casing conduit in its final position shall be straight and true in alignment and grade as required by the drawings.

3. There shall be no void space between the earth and the outside of the casing.

B. Carrier Pipe Spacers:

1. Suitable thread lubricant shall be used on all stainless steel fasteners to prevent galling.

2. Maximum spacing of the spacers shall be 5 feet with a maximum distance from female end of joint of 12 inches.

C. End Seals:

1. Both ends of each casing conduit shall be sealed with a minimum 1/8 inch thick pull-on synthetic rubber end seal.

2. End seal shall be secured to the casing and carrier pipes with all stainless steel worm gear clamps.

3. Lubricants approved by the end seal manufacturer may be used to aid in installation of the end seal.

3.05 FIELD QUALITY CONTROL:

A. Concrete: Contractor shall test all concrete for use in encasements, cradles, and concrete cut-off walls to determine conformance with Specifications. Method of test shall be as specified in DIVISION 3.

END OF SECTION 02222

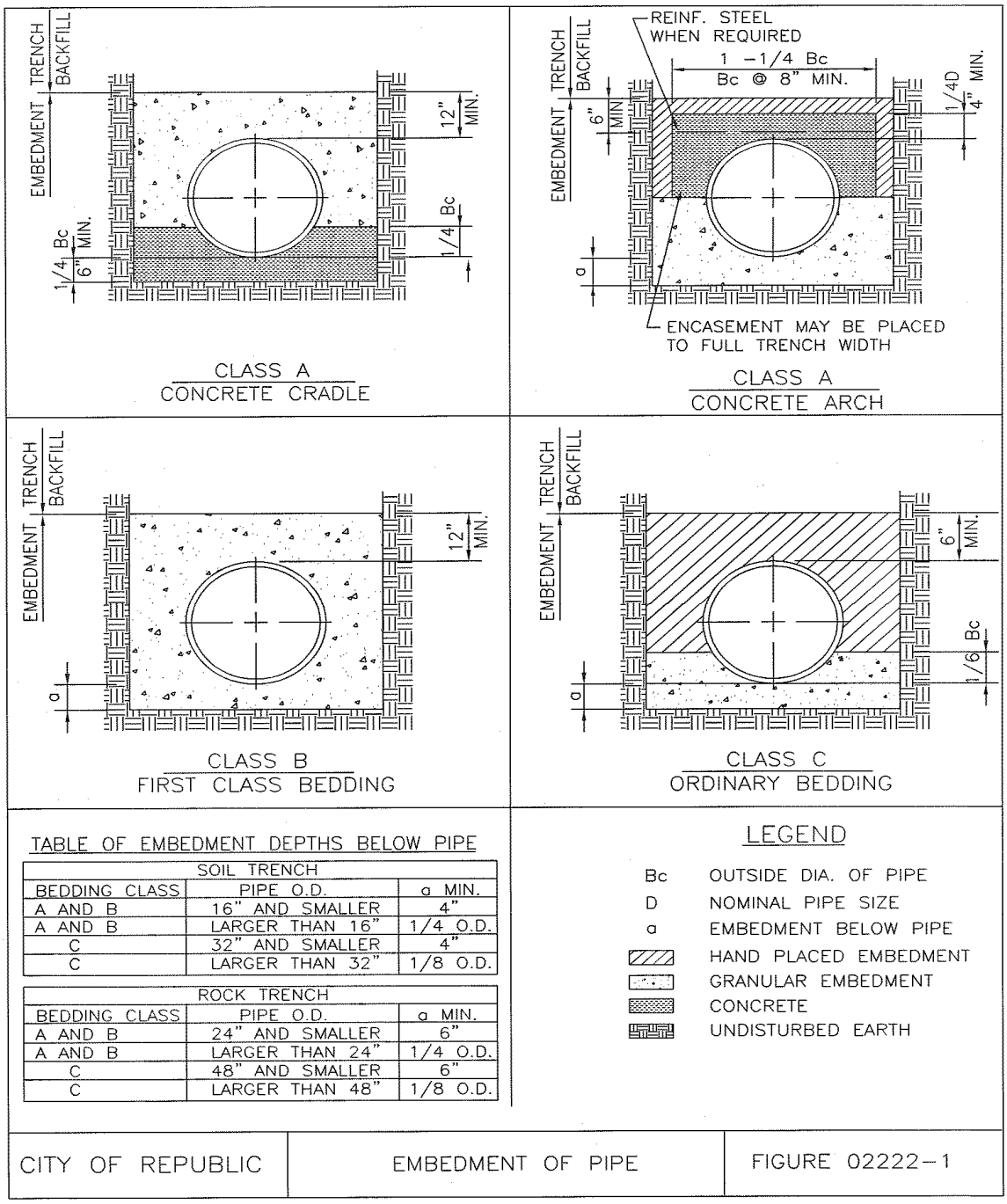

SOIL TRENCH		
BEDDING CLASS	PIPE O.D.	a MIN.
A AND B	16" AND SMALLER	4"
A AND B	LARGER THAN 16"	1/4 O.D.
C	32" AND SMALLER	4"
C	LARGER THAN 32"	1/8 O.D.

ROCK TRENCH		
BEDDING CLASS	PIPE O.D.	a MIN.
A AND B	24" AND SMALLER	6"
A AND B	LARGER THAN 24"	1/4 O.D.
C	48" AND SMALLER	6"
C	LARGER THAN 48"	1/8 O.D.

Figure 1: EMBEDMENT OF PIPE FIGURE 02222-1

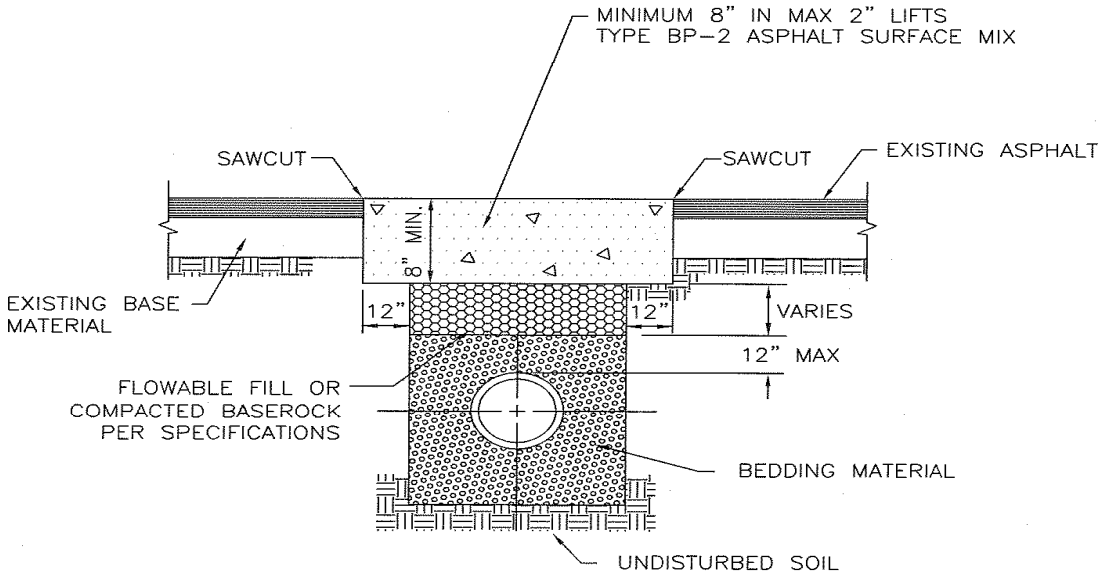

NOTES:
1. CITY OF REPUBLIC
TO SPECIFY SPECIFIC FLOWABLE
FILL MIX DESIGN, POUR TO TOP OF
EXISTING ROADWAY FOR TEMPORARY DRIVING SURFACE
2. LIMESTONE BASE ROCK MUST HAVE
OPTIMAL MOISTURE CONTENT AND
BE COMPACTED EVERY LIFT
FOOT, TEMPORARY 3" COLD MIX ASPHALT
OR UPM PATCH REQUIRED

CITY OF REPUBLIC	ASPHALT STREET REPAIR	FIGURE 02222-2

Figure 2: ASPHALT STREET REPAIR

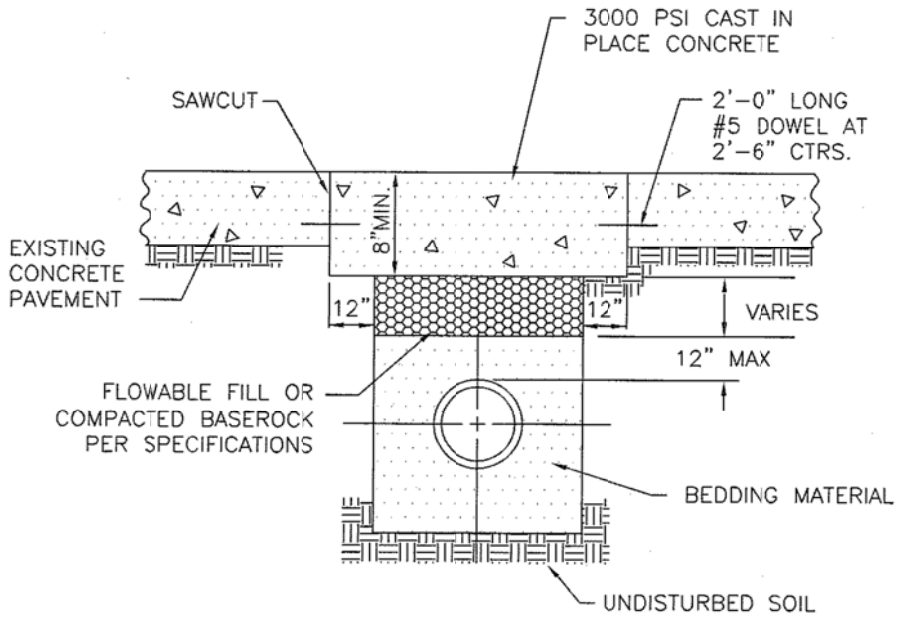

NOTES:
1. CITY OF REPUBLIC TO SPECIFY SPECIFIC FLOWABLE FILL MIX DESIGN, POUR TO TOP OF EXISTING ROADWAY FOR TEMPORARY DRIVING SURFACE
2. COMPACTED DIRTY BASE MUST HAVE OPTIMAL MOISTURE CONTENT AND BE COMPACTED EVERY LIFT FOOT, TEMPORARY 3" COLD MIX ASPHALT OR UPM PATCH REQUIRED

CITY OF REPUBLIC	CONCRETE STREET REPAIR	FIGURE 02222-3

Figure 3: CONCRETE STREET REPAIR FIGURE 02222-3

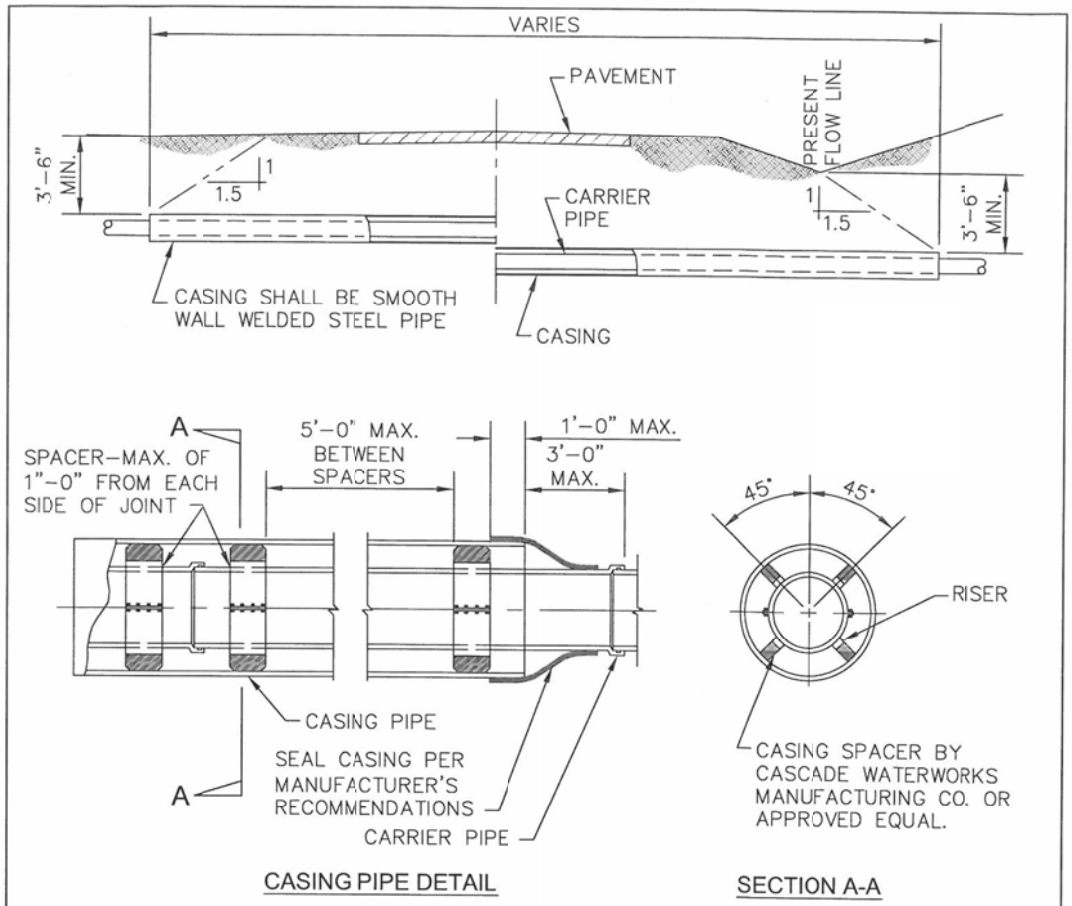

DETAIL NOTES:
1. DEPTH OF BORING PIT SHALL BE AS REQUIRED.
2. THE DRILLED HOLE FOR THE CASING PIPE SHALL BE SLIGHTLY UNDERSIZED AND THE PIPE JACKED THROUGH TO ELIMINATE VOIDS BETWEEN PIPE AND HOLE.
3. BOTH ENDS OF CASING WILL BE SEALED AS PER MANUFACTURER'S RECOMMENDATION.

SMOOTH WALL, WELDED STEEL PIPE WITH A MINIMUM WALL THICKNESS AS FOLLOW WILL BE PERMITTED:

CASING DIAMETER (INCHES)	MINIMUM WALL THICKNESS
6	0.280
8, 10, 12, 14, 16	0.250
18, 20, 22	0.250
24, 26	0.281
30, 32, 34	0.312
36, 38, 40, 48	0.344

CITY OF REPUBLIC	BORE-ENCASEMENT DETAILS	FIGURE 02222-4

Figure 4: BORE-ENCASEMENT DETAILS FIGURE 02222-4

SECTION 02512 – ASPHALTIC CONCRETE PAVEMENT

PART 1 - GENERAL

1.01 SUMMARY:

A. This Section includes asphaltic concrete pavement for roads.

B. Related Work Specified Elsewhere:

1. Site Preparation and Earthwork: SECTION 02200.

C. See Standard Detail for Typical Street Sections at the end of this Section.

1.02 REFERENCES:

A. Applicable Standards:

1. Missouri Standard Specifications for Highway Construction.

a. Section 304 – Aggregate Base Course.

b. Section 401 - Plant Mix Bituminous Base and Pavement.

c. Section 403 - Asphaltic Concrete Pavement.

d. Section 404 - Bituminous Mixing Plant.

e. Section 407 - Tack Coat.

B. American Society for Testing and Materials (ASTM):

1. D2950 - Density of Bituminous Concrete in Place by Nuclear Method.

1.03 SUBMITTALS:

A. Submit as specified in DIVISION 1.

B. Mix Design:

1. Contractor shall provide mix designs and prepare a job mix formula for each mixture specified. Mix designs shall be accomplished by a qualified, independent, commercial testing laboratory.

2. Furnish copies of the proposed job mix formula, including the laboratory test report, to the Engineer for approval not less than 30 days prior to beginning production of paving mixture. Test reports shall indicate the following:

a. Gradation: Each component aggregate and combined aggregates.

b. Asphalt cement content in percent of total mix by weight.

c. Graphic plots of:

(1) Density versus asphalt content.

(2) Stability versus asphalt content.

(3) Percent voids total mix versus asphalt content.

(4) Flow versus asphalt content.

C. Submit certificates accompanied by a copy of the refinery test report for bituminous materials for:

1. Tack coat.

2. Asphalt cement.

D. Samples:

1. Core or saw undamaged Samples from the completed pavement courses.

a. Core Samples shall be not less than 6-inch diameter.

b. Take three Samples from each day's production or from each 300 tons of mixture placed, whichever is the greater number of samples.

c. Deliver Samples to the laboratory designated by the Engineer. Samples may be tested for density and extraction.

3. Replace pavement at sample location with fresh bituminous mixture and thoroughly compact repaired area.

1.04 TESTING:

A. Completed pavement will be tested to determine density, gradation, and asphalt content (by extraction):

1. At Engineer's option, density may be tested by any of the following methods:

a. As specified in Section 401.7.8 of Missouri Standard Specifications for Highway Construction.

b. ASTM D2950.

B. Contractor shall perform such other tests as he deems necessary to assure production of asphaltic concrete conforming to specified quality.

C. Contractor shall test surface smoothness by applying a 10-foot straightedge both parallel and at right angles to the centerline of paved areas:

1. Test at 50-foot (maximum) intervals, and more frequently when requested by the City.

2. City will observe straightedge testing.

3. A rolling straightedge of the "Skorch" type may be used at the Contractor's option.

1.05 TOLERANCES:

A. Density of completed pavement shall not be less than the following percentage of the density of the laboratory mix design:

1. All Lifts: 92%.

B. Smoothness shall be such that variation from a 10-foot straightedge does not exceed the following limits:

1. Final Lift of Base Course: 1/2-inch.

2. Surface Course: 1/4-inch.

PART 2 - PRODUCTS

2.01 GENERAL:

A. Equipment and Materials shall conform to the requirements of Missouri Standard Specifications for Highway Construction.

2.02 MATERIAL:

A. Base Rock

1. Aggregate: Type 1.

B. Bituminous Material:

1. Asphalt Cement: Penetration grade 60 to 70 or 85 to 100 at Contractor's option.

2. Tack Coat: Any of the following liquid asphalts at Contractor's option:

a. SS-1h emulsion diluted 1 part emulsion to 2 parts water.

C. Asphaltic Concrete Mixture:

1. Mixtures:

a. Base Course: Section 401 Plant Mix Bituminous Base or Section 403 Asphaltic Concrete Pavement, Type SP190 or Type 250, Missouri Standard Specifications for Highway Construction.

b. Surface Course: Section 401, Type BP-2 or Section 403, Type SP125, Missouri Standard Specifications for Highway Construction.

2. Mix Properties:

a. Marshall Stability: 1,200 minimum.

b. Number of Compaction Blows: 50.c. Flow: 8 to 16.

d. Percent Air Voids:

(1) Base: 4 to 7.

(2) Surface: 4 to 7.

PART 3 - EXECUTION

3.01 GENERAL:

A. Performance shall conform to the requirements of Missouri Standard Specifications for Highway Construction, Sections 304, 401, and 403.

3.02 TACK COAT:

A. Apply tack coat to the surface of all existing pavement and all previously placed asphaltic concrete lifts or courses before placing the succeeding lift.

B. Apply at the following rates:

1. Emulsion: Minimum 0.2 and maximum 0.10 gallon per square yard.

2. Liquid Asphalt: 0.15 ± 0.05 gallon per square yard.

END OF SECTION 02512

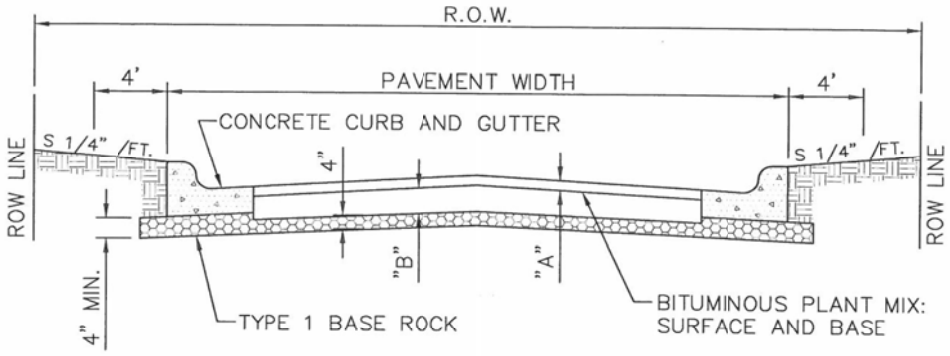

ASPHALTIC CONCRETE PAVEMENT

STANDARD PAVEMENT WIDTH AND THICKNESS CHART

STREET TYPE	MIN. R/W WIDTH	PAVT. WIDTH	"A"	"B"
ALLEY	20'	VARIABLE	1 1/2"	4 1/2"
LOCAL	50'–60'	32'–36'	1 1/2"	5 1/2"
COLLECTOR	60'	36'–44'	1 1/2"	7"
ARTERIAL AND HIGHER	80'–300'	68'	TO BE INDIVIDUALLY DETERMINED	

NOTES:
1. CROSS SLOPE SHALL BE 1/4"/FT. ON ALL PAVEMENTS
2. WIDTH OF PAVEMENT IS SUBJECT TO THE REQUIREMENTS OF THE PLANNING AND ZONING DEPARTMENT AND MAY VARY FROM ABOVE

CITY OF REPUBLIC	TYPICAL STREET SECTIONS	FIGURE 02512–1

Figure 5: TYPICAL STREET SECTIONS FIGURE 02512-1

SECTION 02525 - CURBS, GUTTERS, SIDEWALKS, MEDIAN, AND PAVED DRAINAGE

PART 1 - GENERAL

1.01 SUMMARY:

A. This section includes concrete curbs, gutters, sidewalks, median, and paved drainage where indicated.

B. Related Work Specified Elsewhere:

1. Storm Drainage System: SECTION 02720

2. Concrete: DIVISION 3.

C. See the following Standard Details at the end of this Section:

1. Concrete Curb and Gutter.

2. Concrete Sidewalk and Driveway.

3. Curb Ramp with Detectable Warning

4. Curb Ramp Type I

5. Curb Ramp Type II

6. Concrete Joint Details.

1.02 REFERENCES:

A. Applicable Standards:

1. American Concrete Institute (ACI):

a. 306 - Cold-Weather Concreting.

b. 305 - Hot-Weather Concreting.

2. American Society for Testing and Materials (ASTM):

a. A615 - Deformed and Plain Billet-Steel Bars for Concrete Reinforcement.

b. A616 - Rail-Steel Deformed and Plain Bars for Concrete Reinforcement.

c. C309 - Liquid Membrane-Forming Compounds for Curing Concrete.

d. D1190 - Concrete Joint Sealer, Hot-Poured Elastic Type.

e. D1751 - Preformed Expansion Joint Fillers for Concrete Paving and Structural Construction (Non-extruding and Resilient Bituminous Types).

f. D1752 - Preformed Sponge Rubber and Cork Expansion Joint Fillers for Concrete Paving and Structural Construction.

g. D1850 - Concrete Joint Sealer, Cold-Application Type.

3. Federal Specifications (FS):

a. TT-S-00227 - Sealing Compound; Elastomeric Type, Multi Component. (For caulking, sealing, and glazing in buildings and other structures.)

1.03 WEATHER LIMITATIONS:

A. Conform to ACI 306 when temperature is below 40°F within a 24-hour period after placement of concrete.

B. Conform to ACI 305 when temperature is above 90°F, or is likely to rise above 90°F within a 24-hour period after placement of concrete.

PART 2 - PRODUCTS

2.01 CONCRETE:

A. 4,000 psi concrete as specified in DIVISION 3.

B. Reinforcing steel as specified in DIVISION 3.

C. Concrete slump reduced as necessary for slip-form construction, construction on steep slopes, and consolidation of concrete in curb back sections.

2.02 JOINT DOWELS:

A. Smooth round dowels having at least one-half the length of each dowel coated to ensure that no bond is developed between dowel and concrete.

2.03 Detectable Warning Tiles

A. Detectable warning Surfaces and their components shall be manufactured and/or supplied in a safety yellow color homogenous throughout the tile and matching the pattern shown in Detail Drawing 02525-3 with a slip resistant surface, such as that manufactured by “Armor-Tile” or its equivalent.

B. Conform to ASTM A615, Intermediate Grade or ASTM A616, Regular Grade.

2.04 EXPANSION JOINT FILLER:

A. Preformed material cut and shaped to the required cross section.

B. Thickness of 1/2 inch unless otherwise indicated.

C. Conform to ASTM D1751 for all expansion joints except for those in sidewalks.

D. Conform to ASTM D1752, Type II or Type III, for expansion joints in sidewalks.

2.05 JOINT SEALER:

A. Conform to ASTM D1190 or ASTM D1850 for all joints required to be sealed except those in sidewalks.

B. For Expansion Joints in Sidewalks:

1. Conform to FS TT-S-00227.

2. Non-tracking after initial cure.

3. Two-component, cold-applied.

4. Compatible with preformed expansion joint filler.

5. Black or gray color.

2.06 CURING COMPOUND: Conform to ASTM C309, Type I or Type I-D.

2.07 FORMS:

A. Wood or metal.

B. Straight and strong enough to resist springing during placement of concrete.

C. Sufficient bearing surface to prevent tipping.

D. Height equal to full depth of section to be constructed.

2.08 SLIP-FORM MACHINE:

A. Designed to produce finished concrete items true to line, grade, and cross section.

B. Designed to extrude and compact concrete by means of extrusion form accurately shaped to the required cross section.

C. Line and grade controlled automatically from erected taut wire or string line.

D. Equipped with trailing side form when necessary to support material behind the extrusion plate.

E. Equipped with finishing devices to produce type of finish specified.

PART 3 - EXECUTION

3.01 PREPARATION:

A. Subgrade preparation is as specified in SECTION 02200.

3.02 INSTALLATION:

A. Forms:

1. Use flexible forms for all curved form lines except:

a. Curves having a radius of 200 feet or greater may be formed in 10-foot or shorter chords.

b. Curves having a radius of 100 feet or greater may be formed in 5-foot or shorter chords.

2. Thoroughly clean, oil, securely stake, brace, and hold forms to line and grade.

3. Remove forms from front face of curb section at the time necessary to permit finishing concrete. Leave other forms in place not less than 12 hours after placement of concrete.

B. Joints:

1. Contraction Joints:

a. Construct at locations indicated and as follows:

(1) Divide concrete curb, curb and gutter, median, and paved drainage into monolithic sections not greater than 15 feet in length.

(2) Match contraction joint spacing of adjacent portland cement concrete pavement.

(3) Divide sidewalks into approximately square areas.

b. Form contraction joints by the following methods:

(1) Place 1/8-inch-thick steel separators after concrete has taken its initial set, but before final finishing.

(2) Cut a groove in the fresh concrete to a depth of at least one-fourth the section thickness by use of a jointer having a radius of 1/8 inch and thickness not exceeding 1/8 inch.

(3) Saw the hardened concrete before shrinkage cracking occurs. Depth of cut not less than 1/4 the section thickness and width of key **not to exceed 3/16-inch.**

2. Expansion Joints:

a. Construct at the following locations:

(1) Locations as indicated.

(2) All points of curvature and points of tangency of curves having a radius of 100 feet or less, and at intervals not exceeding 60 feet in tangent section.

(3) Locations matching expansion joint spacing of adjacent portland cement concrete pavement.

(4) Locations where curb, curb and gutter, sidewalk, median, or paved drainage abut each other or other structures and slabs.

b. Stake, support, and secure local transfer dowels and preformed joint filler in position to prevent displacement during placing and finishing operations.

c. Round edges of joints with an edging tool of 1/4-inch radius.

3. Key Joints: Construct at locations indicated for paved drainage and curb and gutter adjacent to portland cement concrete pavement.

4. Construction Joints:

a. Locate to coincide with contraction, expansion, or key joints.

b. When concrete placement is interrupted between joint locations for a sufficient time for the concrete to take its initial set, remove concrete to the nearest joint location before resuming placement.

c. Make transverse construction joints in paved drainage having a thickness of 6 inches or greater by either key joints or expansion joints.

C. Concrete:

1. Placing Concrete:

   a. Place only on compacted and Engineer approved subgrade.

   b. Lightly moisten surface of dry subgrade before placing concrete.

   c. Deposit and compact concrete in manner to avoid displacement of forms and joint materials.

   d. Tamp or vibrate concrete sufficiently to eliminate all voids and bring the mortar to the top for finishing.

2. Finishing Concrete:

   a. Edge concrete with proper edging tools.

   b. Tool radii as soon as possible after concrete has taken its initial set.

   c. Remove curb face forms and rub with rubbing block and water until all blemishes, forms, and tool marks have been removed.

   d. Float-finish with wood float or concrete rubbing block until concrete is true to line, grade, and cross section, and is uniform in texture.

   e. Brush with hairbrush as follows:

      (1) Curb and curb and gutter parallel to the line of curb.

      (2) Sidewalk perpendicular to its longitudinal axis.

   f. Do not use mortar topping or sand and cement dryer.

D. Tolerances:

1. Applies to conventional and slip-form construction.

2. Alignment deviation of finished concrete Work not to exceed 1/4 inch in 10 feet from true line and grade.

3.03 SLIP-FORM CONSTRUCTION:

A. Prepare subgrade a sufficient additional width as necessary to provide support and tracking for the slip-form machine.

B. Adjust slump (reduce) and control concrete mix as necessary to provide satisfactory slip-form construction.

C. Use supplementary hand-finishing operation when necessary to produce uniform finishes free from blemishes and of the types and textures specified.

3.04 CONCRETE CURING AND PROTECTION:

A. Curing:

1. Spray all exposed surfaces after finishing with curing compound.

2. Apply curing compound at a rate of not less than 1 gallon per 25 square yards of surface area.

3. Apply second coat at a rate of not less than 1 gallon per 30 square yards 30 minutes after first-coat application when the atmospheric temperature exceeds 100°F.

B. Protection:

1. Protect the finished Work from damage until final acceptance.

2. Repair, replace, or clean all concrete damaged or discolored prior to final acceptance.

3.05 SEALING JOINTS:

A. Seal all expansion joints and contraction joints 1/4 inch or greater in width.

B. Do not seal portions of expansion joints located in vertical parts of curbs.

C. Remove curing compound and other material from joint surfaces before sealing. Joint shall be clean and surface dry at time of sealant application.

D. Apply joint sealant using methods and equipment necessary to ensure complete filling of the joint space without voids or air bubbles.

E. Apply sealant to conform to sealant manufacturer's instructions.

F. Apply finished sealant from 1/8 inch below to level with adjacent concrete surfaces.

G. Protect adjacent surfaces to prevent contamination with sealant material.

H. Protect sealant until it has set up or cured sufficiently to preclude pickup or tracking.

3.06 DETECTABLE WARNING SURFACES:

A. Detectable warning surfaces consisting of a truncated domes aligned in a square grid pattern shall be provided where a curb ramp or landing connects to a crosswalk.

B. The detectable warning surfaces shall be located so that the nearest edge is between 6 and 8 inches from the back of the curb line and shall extend a minimum of 24 inches in the direction of travel and the full width of the curb ramp, normally 4 feet.

C. Truncated domes shall have a diameter of 0.9 inches at the bottom, a diameter of 0.4 inches at the top, a height of 0.2 inches and a center to center spacing of 2.35 inches measured along diagonal of a square alignment.

D. There shall be a minimum of 70 percent contract in light reflectance between the detectable warning and the adjoining surface. The coloring shall be “safety yellow” and homogenous and made an integral part of the detectable warning surface.

END OF SECTION 02525

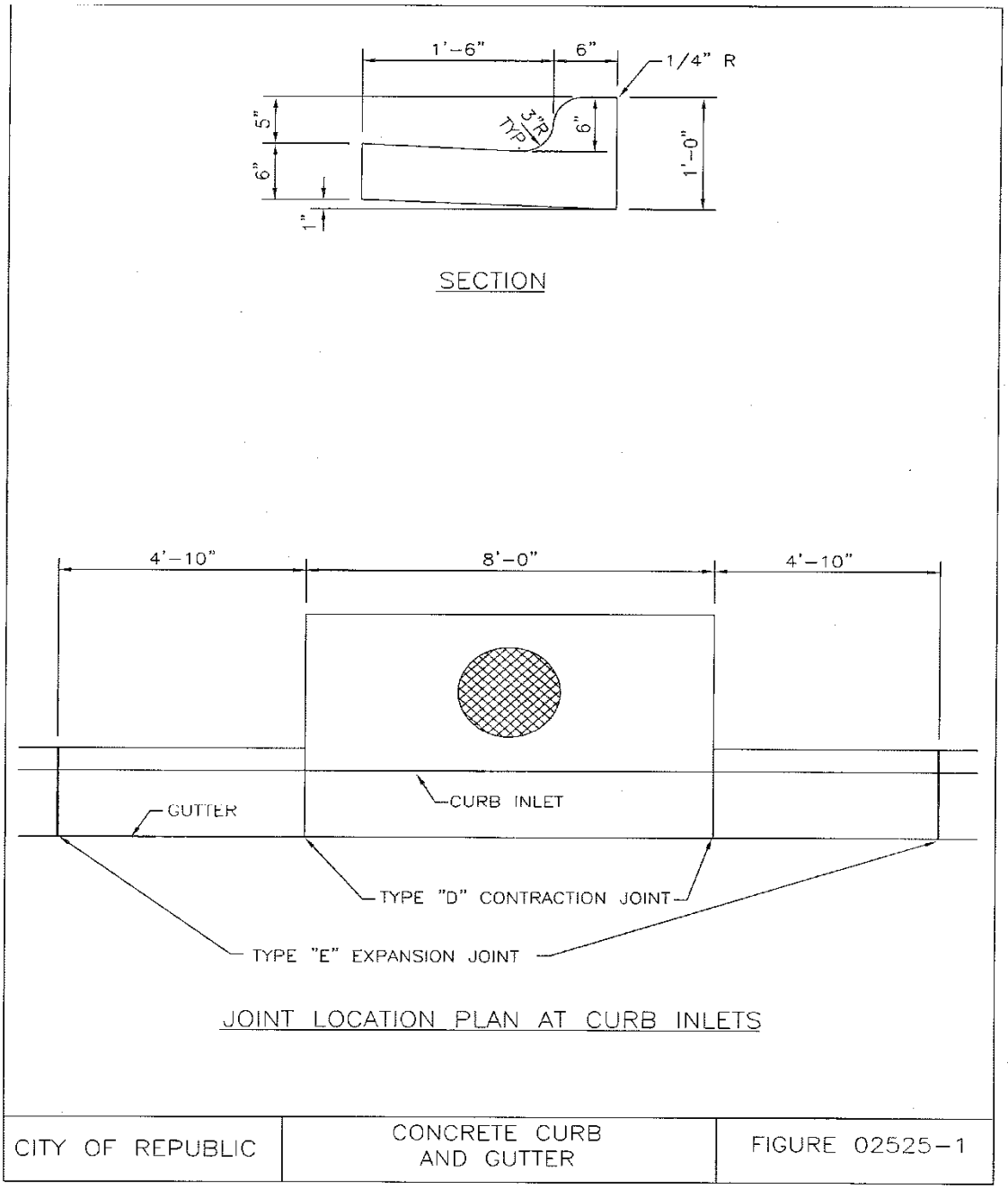

Figure 6: CONCRETE CURB AND GUTTER FIGURE 02525-1

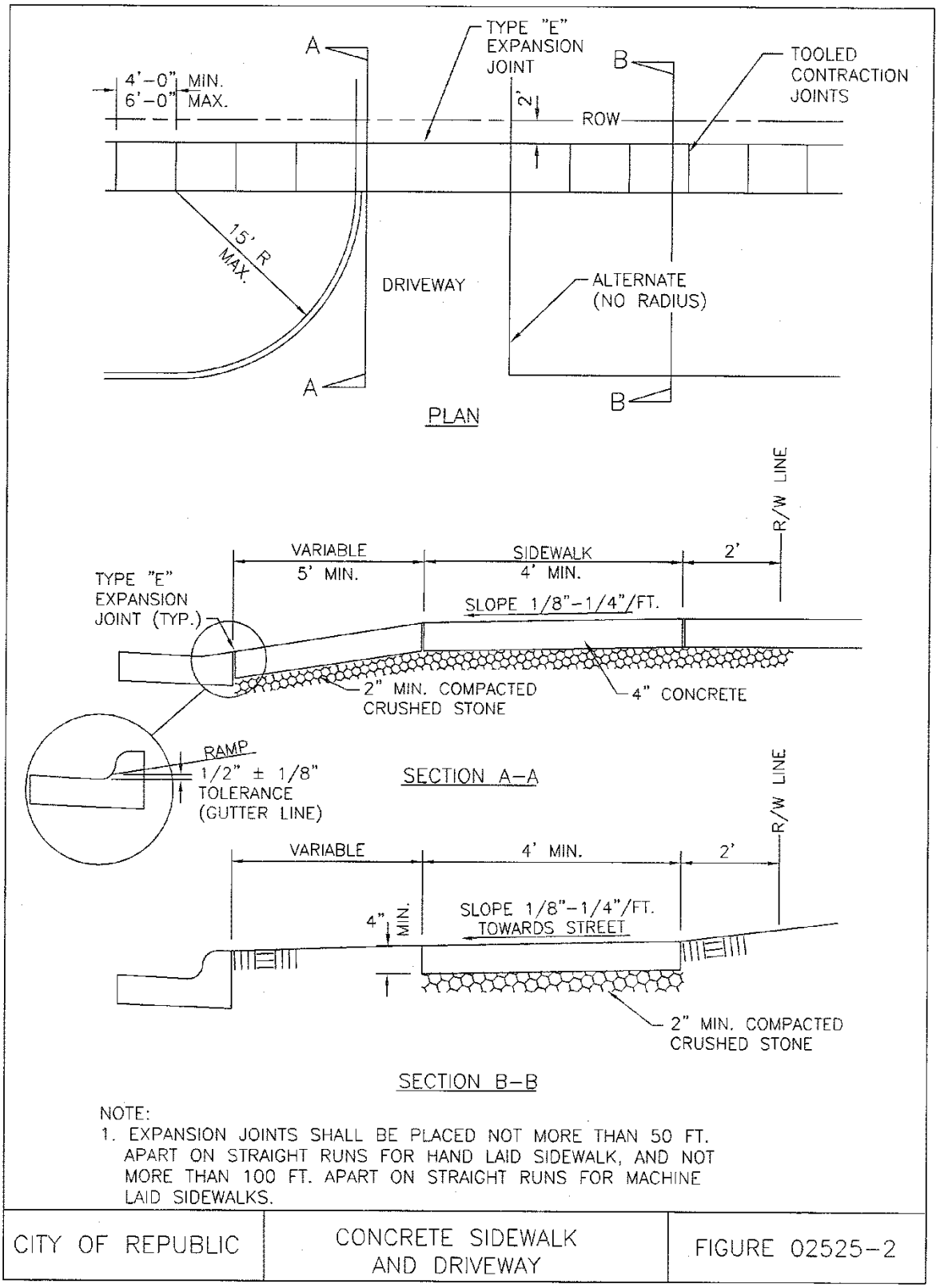

Figure 7: CONCRETE SIDEWALK AND DRIVEWAY FIGURE 02525-2

3

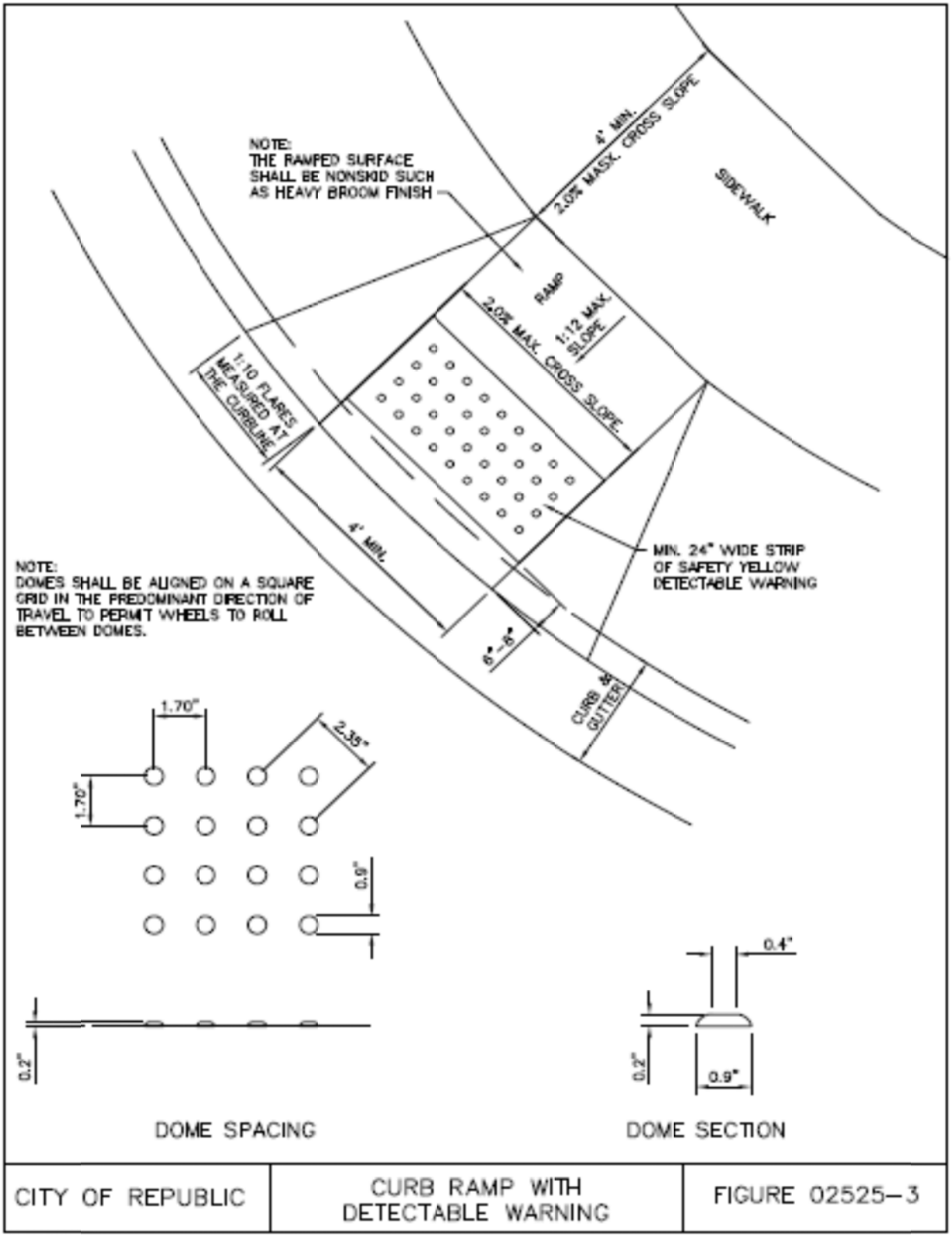

Figure 8: CURB RAMP WITH DETECTABLE WARNING FIGURE 02525-3

02525-013

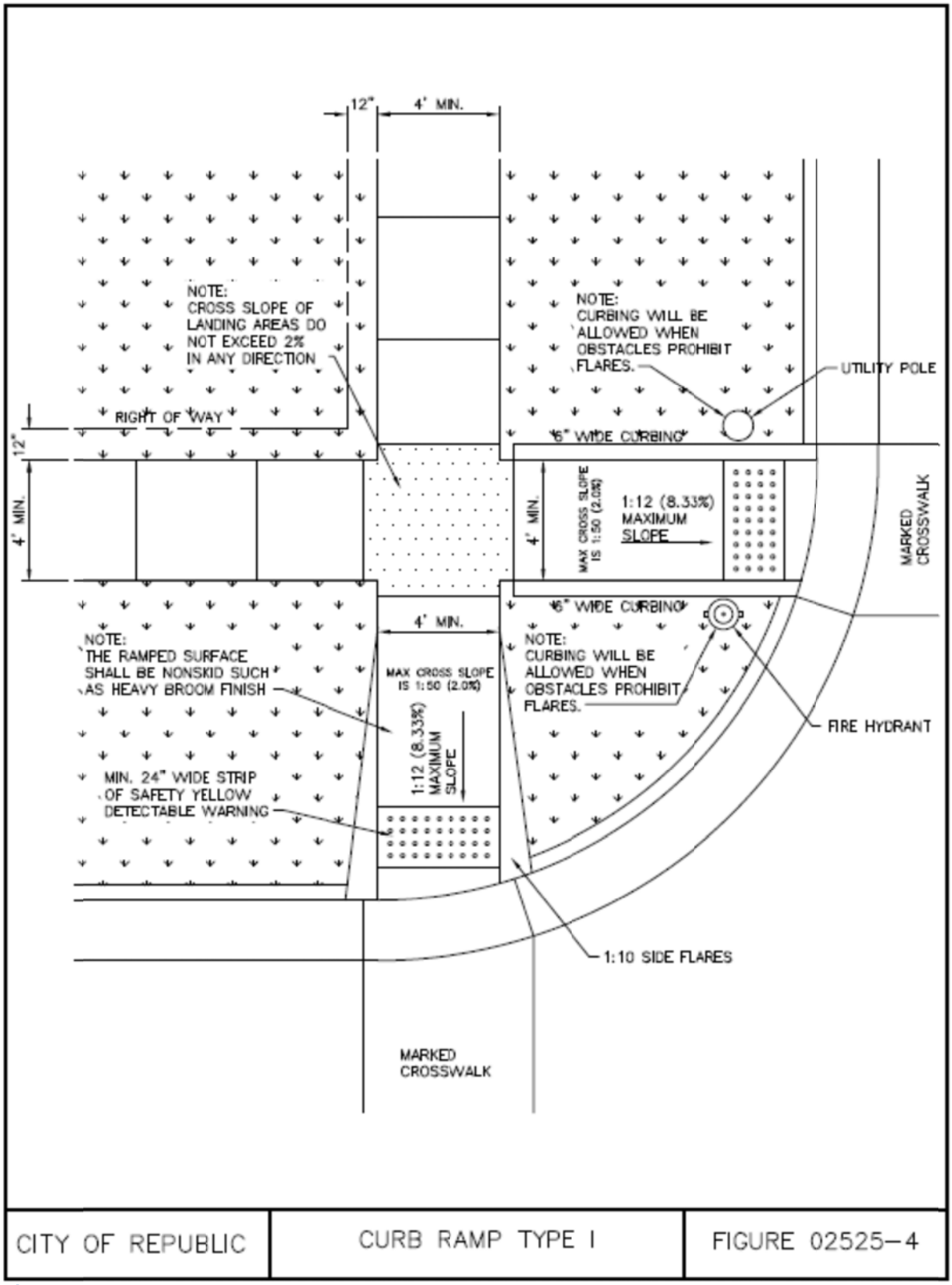

Figure 9: CURB RAMP TYPE I FIGURE 02525-4

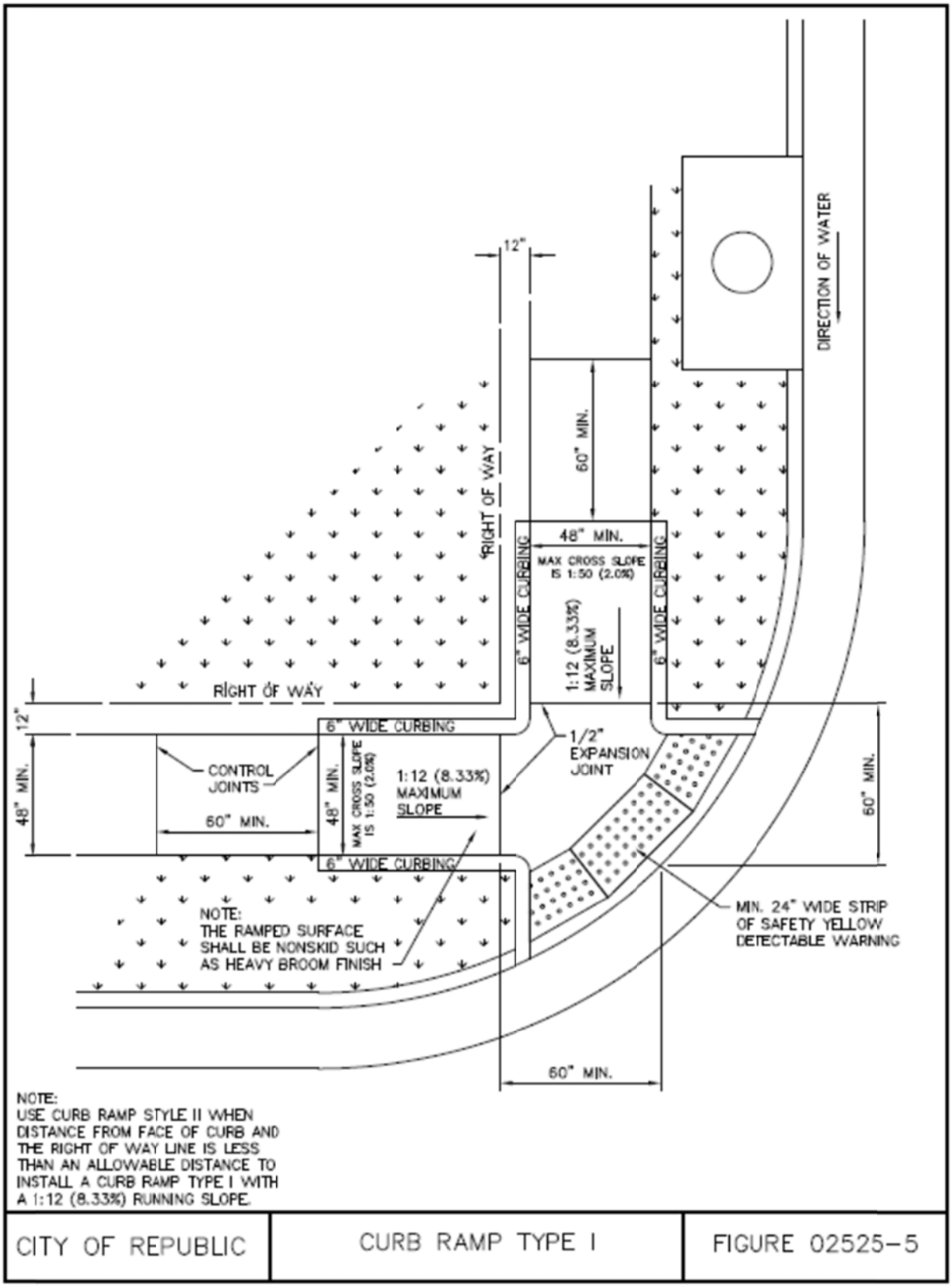

Figure 10: CURB RAMP TYPE II FIGURE 02525-5

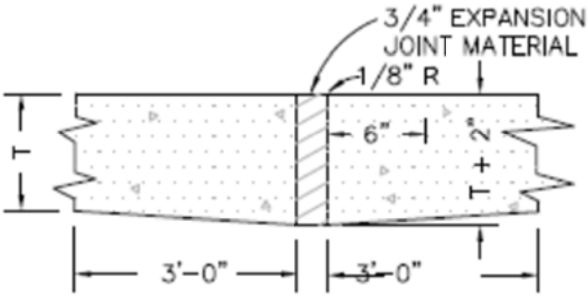

EXPANSION JOINT
(TYPE "E")

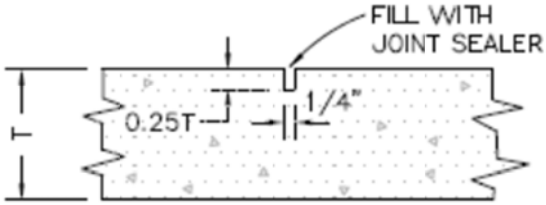

SAWED CONTRACTION JOINT
(TYPE "D")

DEPTH OF SAW JOINT
6" PAV. = 1 1\2"
7" PAV = 1 3\4"
8" PAV. = 2"

CITY OF REPUBLIC	CONCRETE JOINT DETAILS	FIGURE 02525-6

Figure 11: CONCRETE JOINT DETAILS FIGURE 02525-6

SECTION 02605 – MANHOLES AND WETWELLS

PART 1 – GENERAL

1.01. SUMMARY:

A. This Section includes the following structures and related appurtenances:

1. Manholes.

2. Pumping station wetwells.

B. Related Work Specified Elsewhere:

1. Concrete: DIVISION 3.

2. Submersible Wastewater Pumping Station: SECTION 11151.

3. Wetwell Mounted Wastewater Pumping Station: SECTION 11152.

C. See Standard Details for Manholes at the end of this section.

1.02. REFERENCES:

A. Applicable Standards:

1. American Society for Testing and Materials (ASTM):

a. A48 - Gray Iron Castings.

b. C443 - Joints for Circular Concrete Sewer and Culvert Pipe, Using Rubber Gaskets.

c. C478 - Precast Reinforced Concrete Manhole Sections.

d. C76 - Reinforced Concrete Culvert, Storm Drain and Sewer Pipe.

e. C443 - Joints for Circular Concrete Sewer and Culvert Pipe, Using Rubber Gaskets.

2. Federal Specification (FS):

   a. SS-S-00210 - Sealing Compound, Preformed Plastic, for Expansion Joints and Pipe Joints.

PART 2 – PRODUCTS

2.01. MATERIALS:

A. Concrete: Reinforced, 4000 psi. Conform to DIVISION 3.

B. Castings:

1. Manhole steps.

   a. Steel reinforced polypropylene plastic or rubber, M.A. Industries model PS2-PF or equal as approved by City.

2. Manhole frames and covers.

   a. ASTM A48, Class 30B, pattern as specified for each structure under PART 3, this Section.

   b. Interchangeable within same pattern.

3. Conform to drawings in all essentials of design. Weight shall be within 10 percent of that listed for pattern.

4. Machine-bearing surfaces to provide even seating.

5. Coat with coal-tar pitch varnish.

C. Mastic Gasket material shall meet FS SS-S-00210 and be K. T. Snyder “Ram-Nek” or equal.

PART 3 - EXECUTION

3.01. MANHOLES:

A. Design: Manholes shall have eccentric cone unless otherwise approved by City. Construction to conform to one of the acceptable alternatives described as follows:

1. Precast manhole with cast-in-place base or precast concrete base.

   a. Precast manholes shall conform to ASTM C478.

   b. Minimum wall thickness equal to 1/12 of inside diameter plus one inch.

   c. Precast cone section shall be eccentric.

   d. Precast adjusting rings shall be provided with shear rings.

   e. Precast manholes shall be provided with a double row of mastic gasket to seal joints between sections.

   f. When using precast manholes, drop connections must not enter the manhole at a joint.

2. Cast-in-place reinforced concrete manhole.

3. Conform to Standard Details at the end of this section.

4. Submit compliance submittal for precast and cast-in-place reinforced concrete manholes prior to installation.

5. Caulk and repair any leaks or remove entire work and rebuild to obtain watertight construction.

B. Manhole Frames and Cover:

1. Type A frames and lids shall be installed in drainage area and shall be Neenah R-1916-F.

2. Type B frames and lids shall be Neenah R-1642-A with self-sealing lid and concealed pick hole. Type B frames and lids shall be located in all areas except as specified in Item 1 and 3.

3. Type C frame and lid shall be Neenah R-1642 with a non-rocking lid. Type C lids shall be used in all driving areas except those subject to frequent flooding.

4. All frames should be set so that top of cover is two inches higher than finish grade or as directed by the City.

5. Type A, B and C frames shall be anchored to the manhole by mastic gasket material.

C. Connections:

1. Install all piping using an “A-Lok” flexible rubber entrance hole gasket joint.

2. Provide stubouts, located to provide appropriate drop through manhole, for future connections where indicated.

3. Place pipe stub in manhole wall with bell or coupling outside manhole wall to provide flexible joint.

4. Include plug or stopper capable of withstanding 10 feet (4.3 psi) internal or external pressure without leakage for future connections.

5. Connections of new pipe to existing structure shall be made with an “A-Lok” flexible connector. A-Lok connection shall be installed in strict conformance with manufacturer’s recommendations.

D. Invert Channels:

1. Form invert channel with 4000 psi Type II Portland cement concrete.

2. Make changes in direction of flow with smooth curves of as large a radius as size of manhole permits.

3. Make changes in size and grade smoothly and uniformly.

4. Slope floor of manhole adjacent to channels as indicated.

5. Finish channel bottom smoothly without roughness, irregularity, or pockets.

6. A bench shall be provided on each side of any manhole channel when the pipe diameter(s) are less than the manhole diameter. The bench should be sloped no less than one and eight tenths inch per foot (1.85 in/ft), or three inches (3″) for a four foot (4′) diameter manhole with a 8″ sewer pipe. No pipe shall discharge onto the surface of the bench.

E. Waterproofing:

1. Apply 2 coats of coal tar coating to exterior walls, including bottom of the base, on all manholes from base to finish grade.

   a. Koppers - Bitumastic Super Service Black.
   b. Porter - Tarmastic 103.
   c. Tnemec - Heavy Duty Black, 46-449

2. Apply coating in two coats to minimum 15 mils dry film thickness per coat.

F. Corrosion Protection for Manholes: Where corrosive conditions due to septicity or other causes are anticipated, corrosion protection on the interior of the manholes shall be provided.

3.02. PUMPING STATION WETWELLS:

A. Design: Construct wetwells of reinforced concrete pipe conforming to ASTM C76, Class III.

1. Minimum inside diameter 96 inches.

2. Minimum wall thickness equal to 1/12 of inside diameter plus one inch.

3. Submit compliance submittal for wetwells prior to installation.

B. Joints: Conforming to ASTM C433.

C. Top:

1. Provide 10'-6" diameter by 12 inch thick reinforced concrete wetwell top with opening for wetwell mounted pumping station or with embedded access hatch for submersible pumping stations.

D. Bottom:

1. Provide 10′-6″ diameter by 2′-6″ minimum thickness reinforced concrete bottom.

2. Provide six inches of compacted granular fill beneath bottom.

3. Provide concrete fill, on 1:1 slope, at bottom of wetwell to form wetwell bottom sump.

E. Connections:

1. Install all piping using an “A-Lok” flexible rubber entrance hole gasket joint.

2. Place pipe stub in wetwell wall with bell or coupling outside wetwell wall to provide flexible joint.

F. Waterproofing: Apply exterior waterproofing as specified for Manholes in this Section.

END OF SECTION 02605

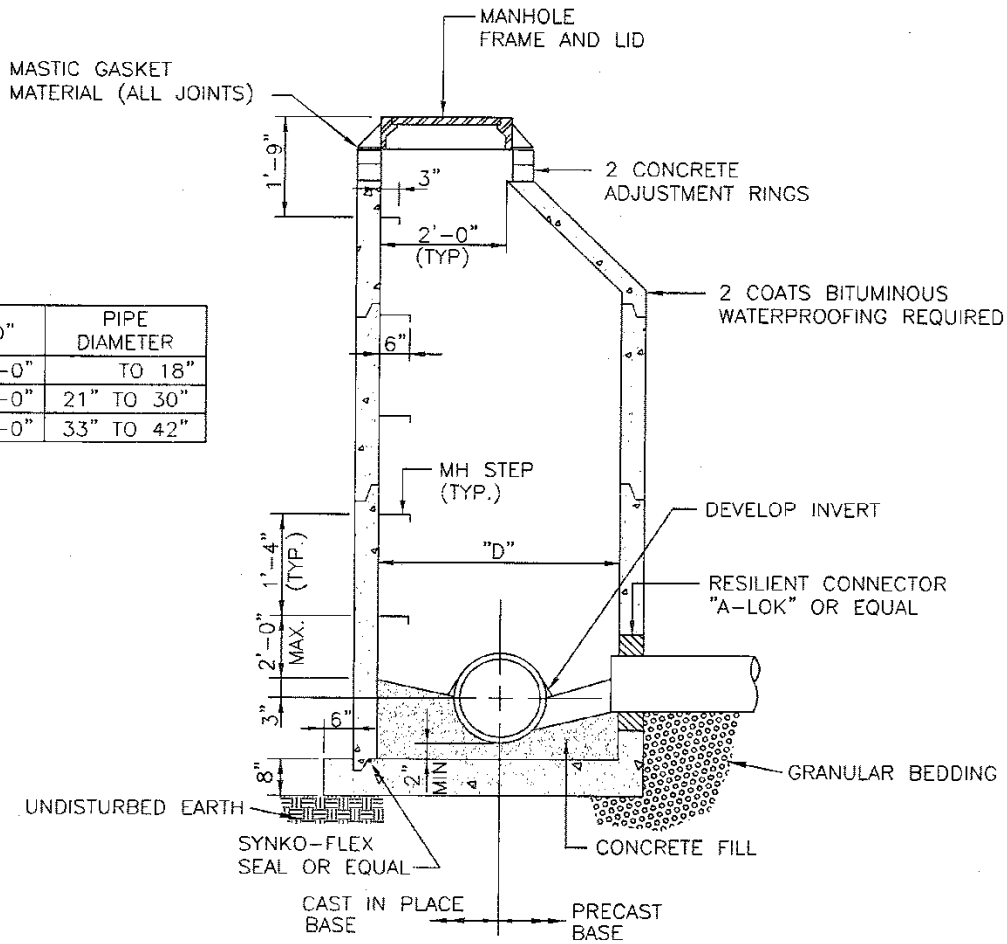

"D"	PIPE DIAMETER
4'-0"	TO 18"
5'-0"	21" TO 30"
6'-0"	33" TO 42"

GENERAL NOTES:

1. TWO COATS EXTERIOR BITUMINUS WATERPROOFING REQUIRED ON ALL MANHOLES IN ACCORDANCE WITH SPECIFICATIONS.
2. CIRCULAR PRECAST MANHOLE SECTIONS TO BE SEALED WITH GASKETS AS PER SPECIFICATIONS.
3. MANHOLE WALL THICKNESS: 1/12 OF INSIDE DIA. PLUS ONE INCH.
4. INCREASE WALL THICKNESS TO 6" WHEN DEPTH OF MANHOLE EXCEEDS 16'-0".
5. CIRCULAR PRECAST MANHOLE SECTIONS TO BE IN ACCORDANCE WITH ASTM C478, EXCEPT AS MODIFIED.
6. MANHOLE STEPS TO BE CAST IN PLACE, OR GROUTED WITH EXPANDING GROUT
7. ALL MANHOLE RINGS TO BE SET IN MASTIC.
8. MINIMUM MANHOLE RING OPENING SHALL BE 24" CLEAR.

CITY OF REPUBLIC	STANDARD MANHOLE DETAIL	FIGURE 02605-1

Figure 12: STANDARD MANHOLE DETAIL FIGURE 02605-01

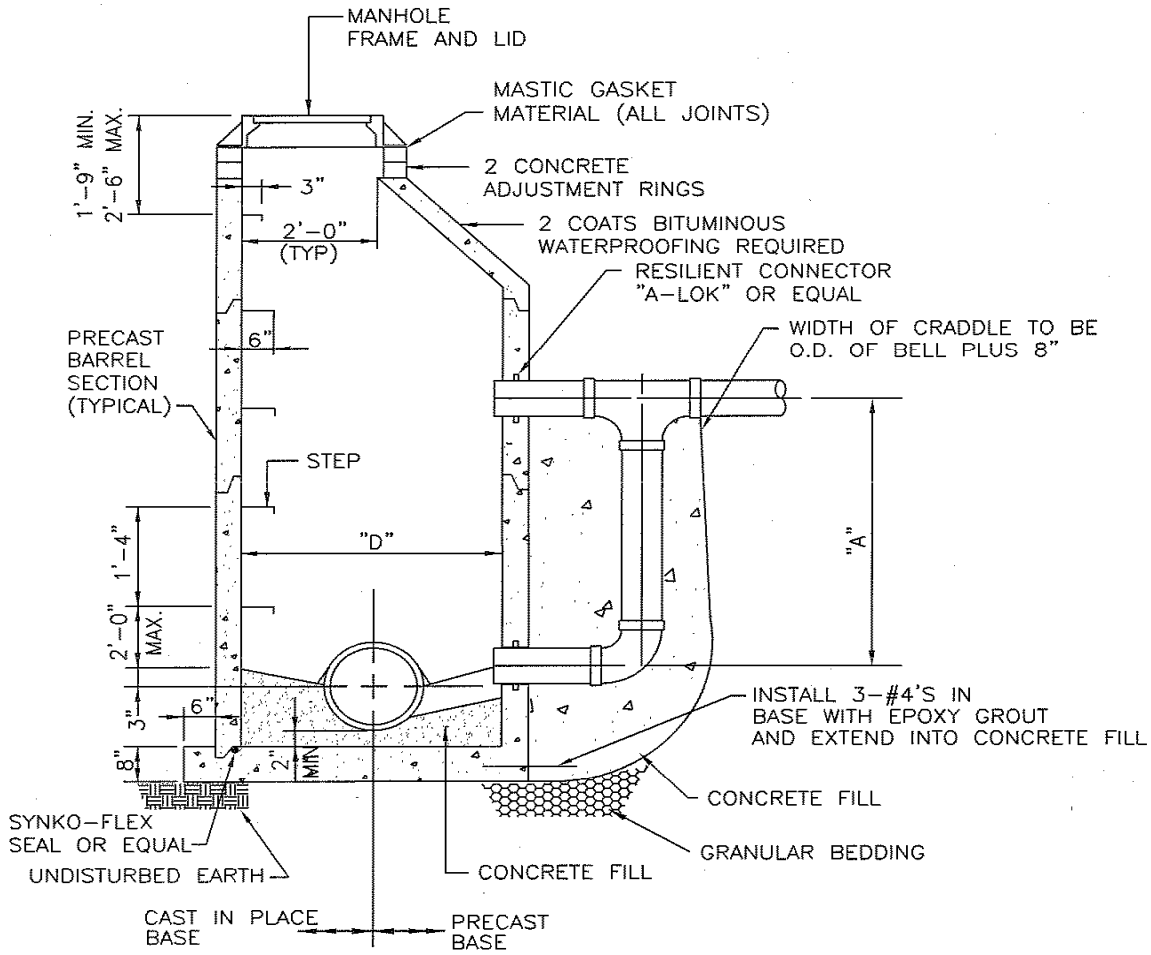

GENERAL NOTES:

1. TWO COATS EXTERIOR BITUMINUS WATERPROOFING REQUIRED ON ALL MANHOLES IN ACCORDANCE WITH SPECIFICATIONS.
2. CIRCULAR PRECAST MANHOLE SECTIONS TO BE SEALED WITH GASKETS AS PER SPECIFICATIONS.
3. MANHOLE WALL THICKNESS: 1/12 OF INSIDE DIA. PLUS ONE INCH.
4. CIRCULAR PRECAST MANHOLE SECTIONS TO BE IN ACCORDANCE WITH ASTM C478, EXCEPT AS MODIFIED.
5. MANHOLE STEPS TO BE CAST IN PLACE, OR GROUTED W/ EXPANDING GROUT
6. ALL MANHOLE RINGS TO BE SET IN MASTIC.
7. MINIMUM MANHOLE RING OPENING SHALL BE 24" CLEAR.

I.D. INCOMING PIPE	I.D. DROP PIPE	"A" MINIMUM	"D" DIAMETER
8"	8"	2'-0'	4'-0'
10"	10"	2'-0'	4'-0'
12"	12"	2'-0'	4'-0'
15"	12"	2'-0"	4'-0"
18"	15"	2'-2"	4'-0"
21"	18"	2'-7"	5'-0"
24"	18"	2'-9'	5'-0"
27"	18"	2'-10'	5'-0"
30"	18"	3'-1"	5'-0"
36"	18"	3'-4"	6'-0"
42"	24"	3'-6"	6'-0"
48"	30"	4'-0"	6'-0"

CITY OF REPUBLIC	STANDARD OUTSIDE DROP MANHOLE DETAIL	FIGURE 02605-2

Figure 13: STANDARD OUTSIDE DROP MANHOLE DETAIL FIGURE 02605-2

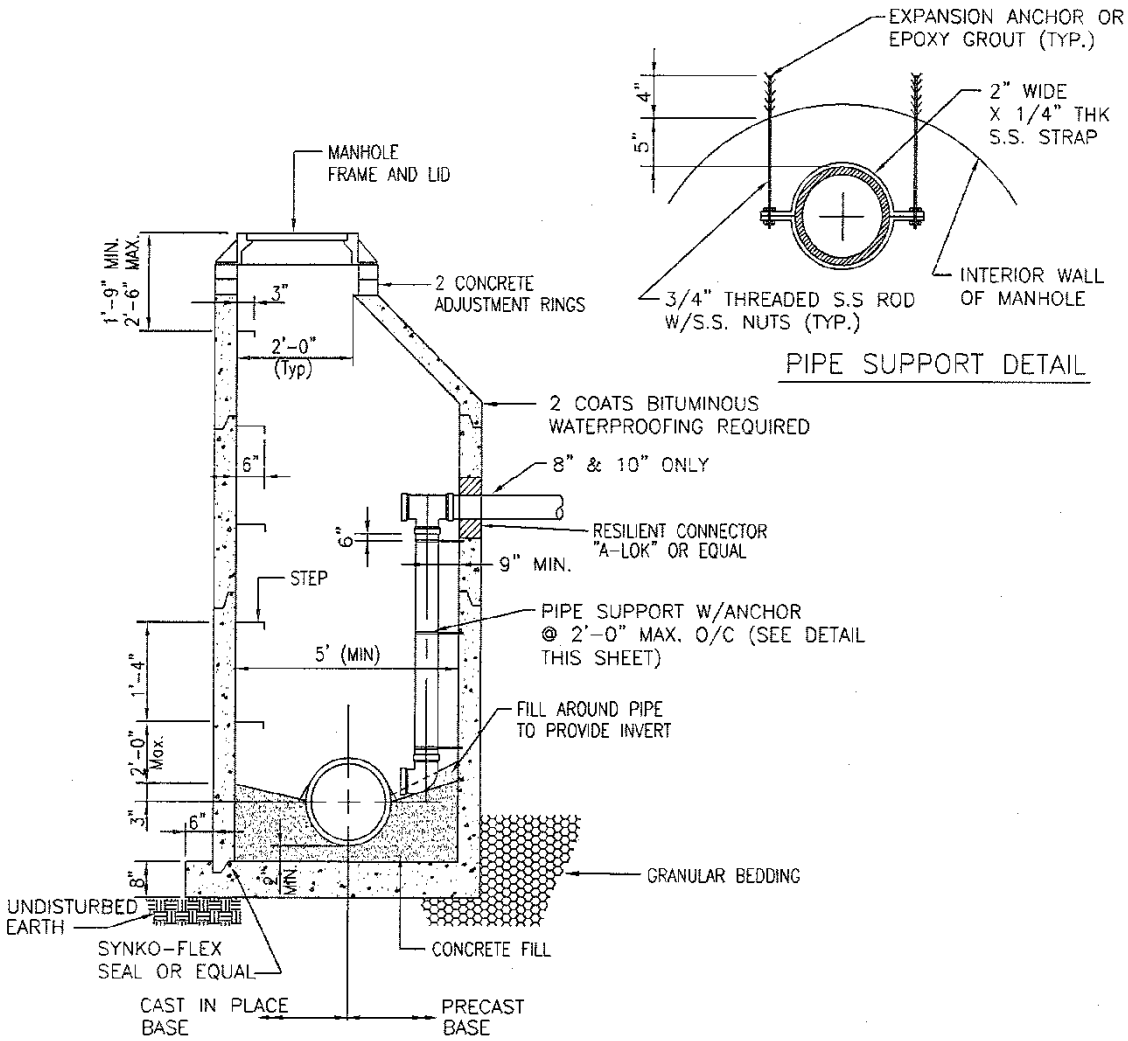

GENERAL NOTES

1. TWO COATS EXTERIOR BITUMINUS WATERPROOFING REQUIRED ON ALL MANHOLES IN ACCORDANCE WITH SPECIFICATIONS.
2. CIRCULAR PRECAST MANHOLE SECTIONS TO BE SEALED WITH GASKETS AS PER SPECIFICATIONS.
3. MANHOLE WALL THICKNESS 1/12 OF INSIDE DIA. PLUS ONE INCH.
4. CIRCULAR PRECAST MANHOLE SECTIONS TO BE IN ACCORDANCE WITH ASTM C478, EXCEPT AS MODIFIED.
5. MANHOLE STEPS TO BE CAST IN PLACE, OR GROUTED WITH EXPANDING GROUT.
6. ALL MANHOLE RINGS TO BE SET IN MORTAR.
7. MINIMUM MANHOLE RING OPENING SHALL BE 24" CLEAR.
8. INSIDE DROP MANHOLE TO BE USED ON LINES WITH 8" OR 10" INCOMING PIPE ONLY.

CITY OF REPUBLIC	STANDARD INSIDE DROP MANHOLE DETAIL	FIGURE 02605-3

Figure 14: STANDARD INSIDE DROP MANHOLE DETAIL FIGURE 02605-3

NOTES:

1. TYPE A WATERPROOF FRAME AND LID IS FOR USE IN DRAINAGE AREAS
2. NEENAH R-1916-F
3. ALL DIMENSIONS ARE IN INCHES UNLESS NOTED OTHERWISE.

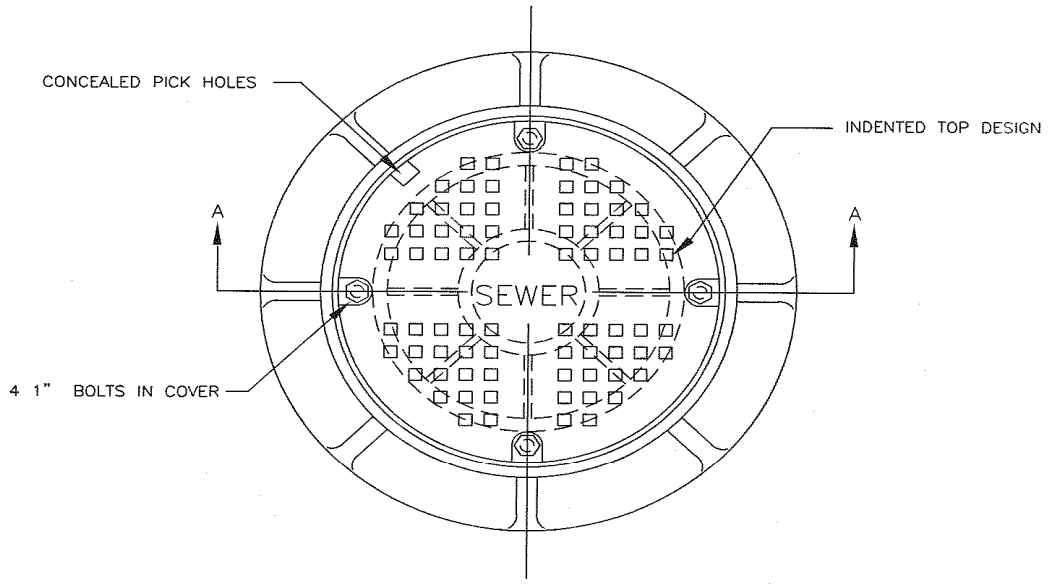

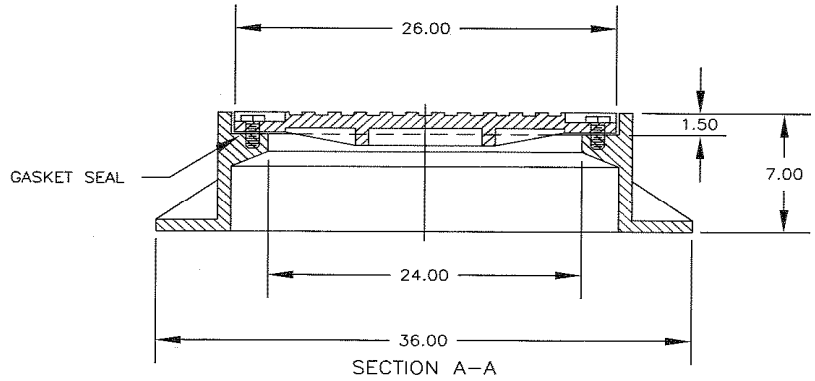

CITY OF REPUBLIC	TYPE A MANHOLE FRAME AND LID	FIGURE 02605-4

Figure 15: TYPE A MANHOLE FRAME AND LID FIGURE 02605-4

NOTES:

1. TYPE B MANHOLE FRAME AND COVER FOR USE OUTSIDE DRIVING SURFACES.
2. NEENAH R-1642-A WITH SELF SEALING LID AND CONCEALED PICKHOLE
3. ALL DIMENSIONS ARE IN INCHES UNLESS NOTED OTHERWISE.

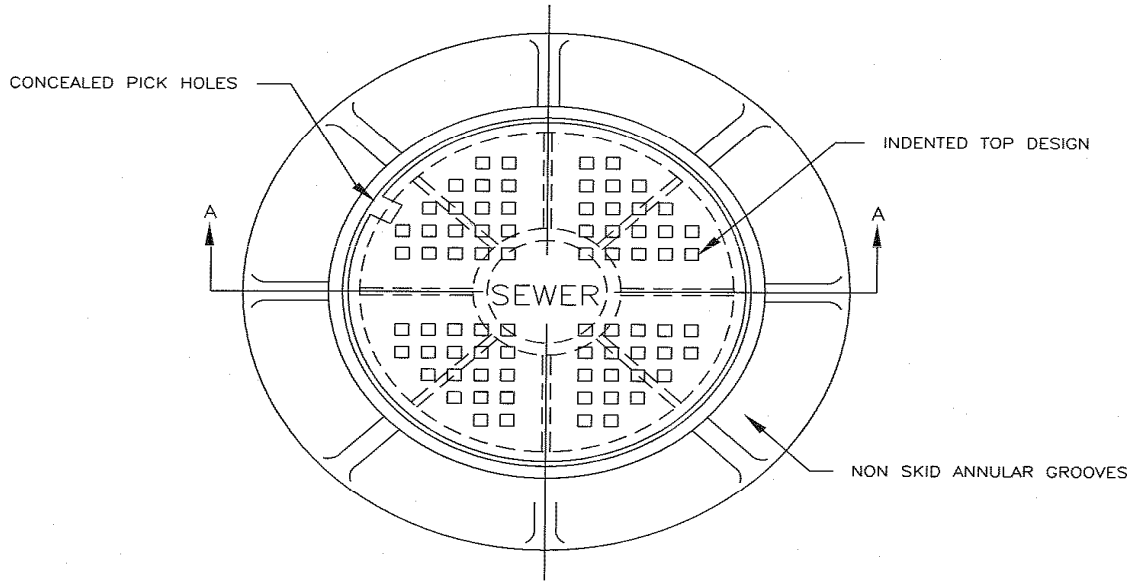

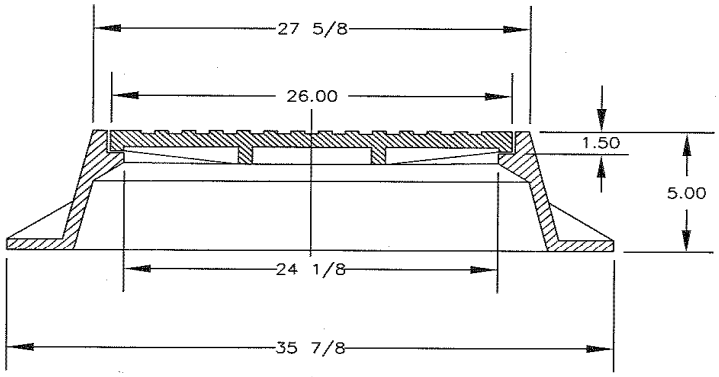

SECTION A-A

CITY OF REPUBLIC	TYPE B MANHOLE FRAME AND LID	FIGURE 02605-5

Figure 16: TYPE B MANHOLE FRAM AND LID FIGURE 02605-5

NOTES:

1. TYPE C MANHOLE FRAME AND LID IS FOR USE IN DRIVING AREAS.
2. NEENAH R-1642 WITH NON-ROCKING TYPE LID.
3. ALL DIMENSIONS ARE IN INCHES UNLESS NOTED OTHERWISE.

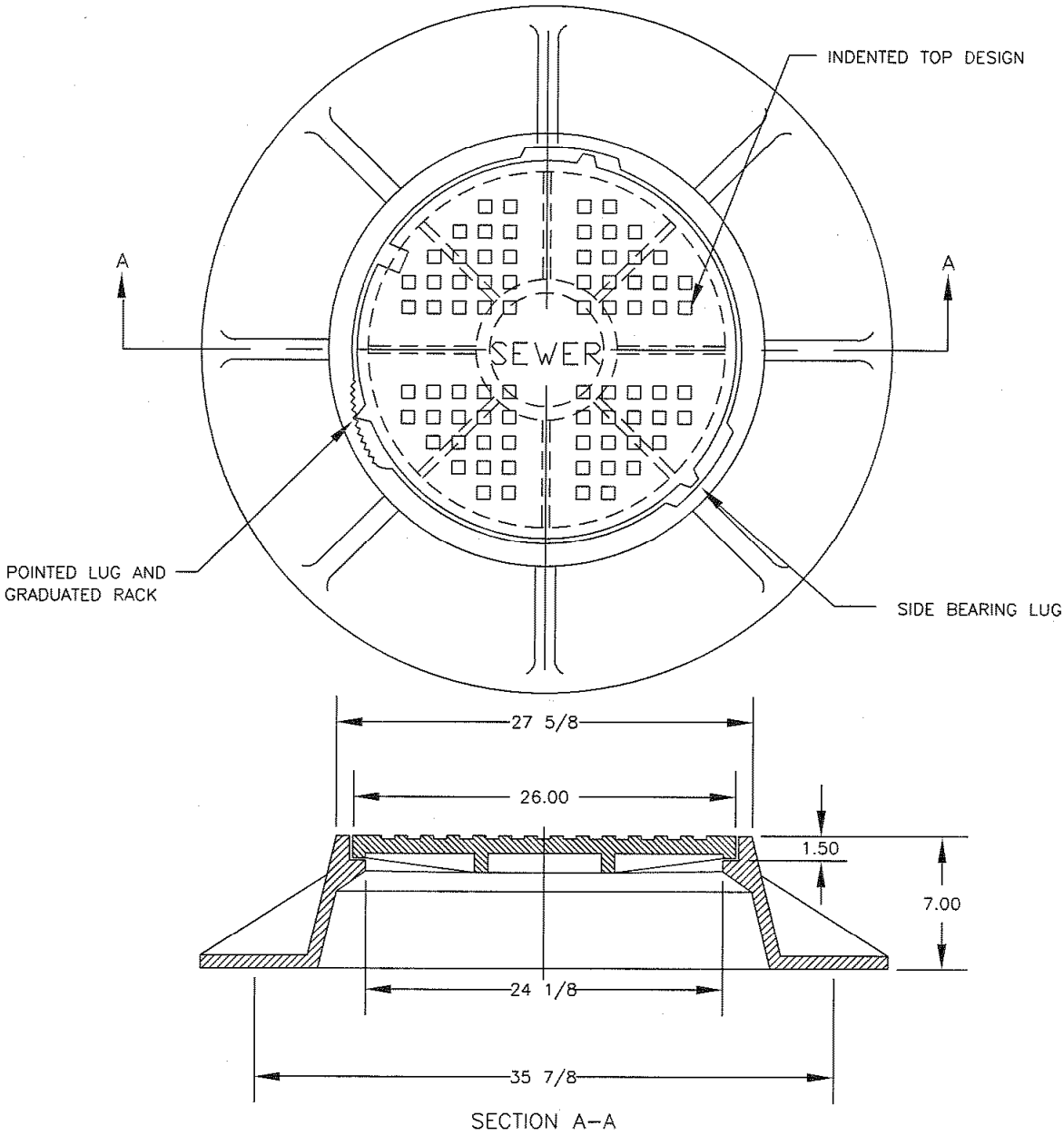

CITY OF REPUBLIC	TYPE C MANHOLE FRAME AND LID	FIGURE 02605-6

Figure 17: TYPE C MANHOLE FRAME AND LID FIGURE 02605-6

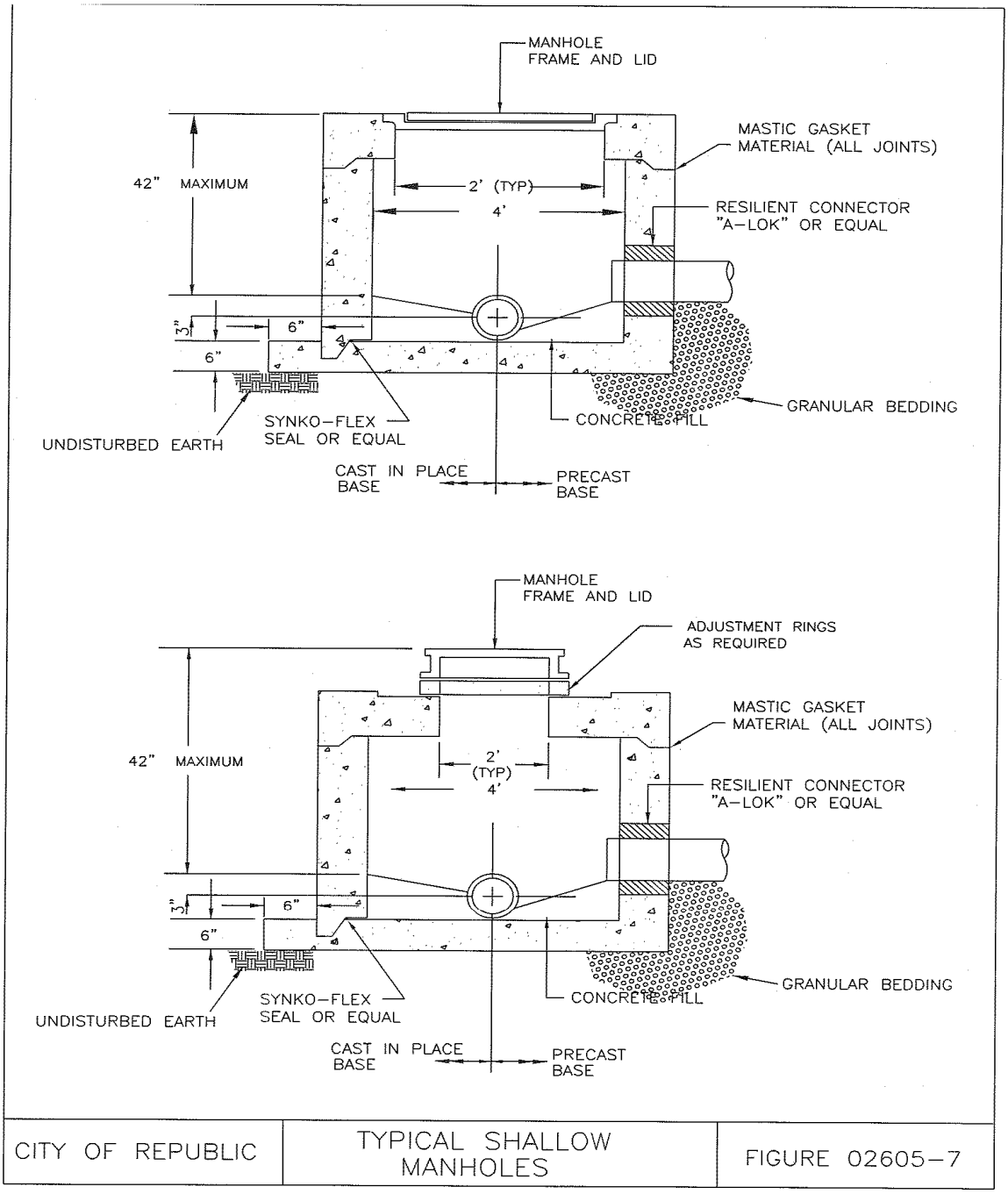

Figure 18: TYPICAL SHALLOW MANHOLES FIGURE 02605-7

SECTION 02610 – SANITARY SEWER PIPE

PART 1 - GENERAL

1.01 SUMMARY:

A. This Section includes all sanitary sewer pipe, fittings and specials.

B. Related Work Specified Elsewhere:
   1. Pipe Installation and Testing: SECTION 02620.

1.02 REFERENCES:

A. Applicable Standards:

   1. American Society for Testing and Materials (ASTM):

      a. D 3034 - Polyvinyl Chloride Sewer Pipe and Fittings.

      b. D 2241 - Polyvinyl Chloride (PVC) Pressure Rated Pipe.

      c. A746 - Ductile Iron Gravity Sewer Pipe.

   2. American Water Works Association (AWWA):

      a. C110 - Ductile-Iron and Gray-Iron Fittings, 3-inch through 48-inch, for Water and Other Liquids.

      b. C111 - Rubber-Gasket Joints for Cast-Iron and Ductile-Iron Pressure Pipe and Fittings.

1.03 SUBMITTALS:

A. Submit as specified in DIVISION 1.

B. Submit the following for acceptance prior to fabrication:

   1. Pipe and joint details.

   2. Special, fitting and coupling details.

   3. Laying and installation schedule.

   4. Manufacturer's design calculations.

C. Certificates and Affidavits:

1. Submit as specified in DIVISION 1.

2. Furnish the following prior to shipment:

a. Affidavit of compliance with applicable standard.

b. Test certificates.

1.04 QUALITY ASSURANCE:

A. Manufacturer:

1. Experienced in the design, manufacture and commercial supplying of the specific material for a minimum period of three years.

2. Experienced in the design, manufacture, and commercial supplying of the specific size of pipe for a minimum period of one year.

4. Certify to above minimum experience requirements.

PART 2 - PRODUCTS

2.01 PIPE REQUIREMENTS:

A. Furnish pipe of materials, joint types, sizes, and strength classes indicated or specified. Higher strengths may be furnished at Contractor's option. Furnish maximum pipe lengths produced by the manufacturer.

B. Pipe shall be designed to withstand all stresses resulting from external loads including both earth load (120 lb/cu. ft.) and truck loads based on AASHTO H-20 truck (submit manufacturer's design calculations).

C. Pipe Bedding: As specified.

D. Pipe Marking:

1. All pipe, fittings and specials shall be marked conforming to the applicable standard specification under which the pipe is manufactured and as otherwise specified.

2. Mark field location of fittings and specials by station.

E. Pipe Gaskets: All elastomeric gaskets and seals shall be synthetic rubber.

F. Length of Pipe: Furnish in lengths of not less than 20 feet, except for fittings, closure pieces, and specials.

2.02 POLYVINYL CHLORIDE PIPE (PVC):

A. Design and Manufacture of Pipe:

1. PVC Pipe shall conform to ASTM D 3034, SDR 35 with minimum 46 psi stiffness rating for bury depths up to 10 feet.

2. All materials used in the manufacture of pipe, fittings and accessories shall conform to ASTM D1784, Class 12454-B.

3. PVC Pipe shall conform to ASTM D3034. SDR 26 with minimum 46 psi stiffness rating for bury depths exceeding 10 feet.

B. Joints:

1. Provide push-on joints conforming to ASTM D 3212 with elastomeric seals conforming to ASTM F477.

2. Field cut joints and connections to other piping material shall be made with Can-Tex "C-T Adapters" with stainless steel bands.

2.03 DUCTILE-IRON PIPE:

A. Design and Manufacture of Pipe:

1. Ductile iron gravity sewer pipe shall conform to ASTM A746 except as otherwise specified.

2. With laying condition Type 5.

3. Use E' of 700 and bedding angle of 150 degrees.

4. With a maximum 5 percent design deflection for trench load calculations.

5. Net calculated thickness shall include standard casting tolerances plus 0.08-inch additional service allowance.

6. Select special class thickness next above total calculated thickness.

B. Dimensions:

1. The minimum pressure class for ductile iron pipe shall be 350 psi.

C. Joints:

1. Provide push-on joints conforming to AWWA C111 for all buried pipe unless otherwise specified or indicated.

D. Fittings:

1. Conform to AWWA C110 and be ductile iron.

2. Provide all specials, taps, and plugs as specified or indicated.

E. Lining:

1. Line all pipe, fittings and specials with coal-tar epoxy. Clean interior to SSPC-5 quality and 1.5-2.5 mils profile depth. Lining to extend from edge of plain end to the gasket seat in the bell socket.

F. Coating: All pipe and fittings shall be coated with manufacturer's standard coating.

PART 3 – EXECUTION

3.01 INSTALLATION: Specified in SECTION 02620.

3.02 FIELD TESTING: Specified in SECTION 02620.

END OF SECTION 02610

SECTION 02615 - PRESSURE PIPE

PART 1 - GENERAL

1.01 SUMMARY:

A. This Section includes all pressure pipe, fittings, specials and appurtenances.

B. Related Work Specified Elsewhere:

1. Pipe Installation and Testing: SECTION 02620.

2. Valves, Hydrants and Accessories: SECTION 02640.

1.02 REFERENCES:

A. Applicable Standards:

1. American Water Works Association (AWWA):

a. C111 - Rubber-Gasket Joints for Ductile-Iron Pressure Pipe and Fittings.

b. C115 - Flanged Ductile-Iron Pipe with Threaded Flanges.

c. C150 - Thickness Design of Ductile-Iron Pipe.

d. C151 - Ductile-Iron Pipe, Centrifugally Cast, for Water or Other Liquids.

e. C153 - Ductile-Iron Compact Fittings, 3 Inches Through 16 Inches, for Water and Other Liquids.

2. American Society for Testing and Materials (ASTM):

a. A307 - Carbon Steel Bolts and Studs, 60,000 psi Tensile Strength.

b. D 2241 - Polyvinyl Chloride (PVC) Pressure Rated Pipe.

3. Steel Structures Painting Council (SSPC):

a. SP5 - White Metal Blast Cleaning.

1.03 SUBMITTALS:

A. Submit as specified in DIVISION 1.

B. Submit the following for acceptance prior to fabrication:

1. Pipe and joint details.

2. Special, fitting and coupling details.

3. Laying and installation schedule.

4. Specifications, data sheets and affidavits of compliance for protective shop coatings and linings.

5. Manufacturer's design calculations.

C. Certificates and Affidavits: Furnish the Following Prior to Shipment:

1. Affidavit of compliance with applicable standard.

2. Test certificates.

1.04 QUALITY ASSURANCE:

A. Manufacturers shall be experienced in the design and manufacture of pipe, fittings, specials or appurtenances for a minimum period of 5 years.

PART 2 - PRODUCTS

2.01 PIPE REQUIREMENTS

A. Furnish pipe of materials, joint types and sizes as indicated or specified.

B. Pipe Marking: All pipe and fittings shall be marked conforming to the applicable standard specification under which the pipe is manufactured and as otherwise specified.

2.02 DUCTILE-IRON PIPE

A. Design and Manufacture of Pipe:

1. Ductile-iron pipe shall conform to AWWA C150 and C151 except as otherwise specified.

2. With laying condition Type 5.

   a. Use E' of 700 and bedding angle of 150°.

   b. 3% deflection limit.

   c. Add service allowance and standard casting tolerances of AWWA C150.

   d. Select standard pressure-class thickness or special thickness class next above total calculated thickness.

B. Dimensions: The minimum thickness as defined by pressure class for mechanical or push-on-type joint ductile iron pipe shall be 350 psi.

C. Joints:

1. Push-On:

   a. All pipe shall be provided with push-on joints unless otherwise noted.

2. Restrained:

   a. Provide restrained joint pipe where required.

   b. Provide restrained joints of following approved types:

      (1) Restrained mechanical joint.

      (2) Restrained push-on joint.

      (3) Boltless or bolted ball and socket joint.

      (4) Anchored couplings.

   C. Retainer glands shall be Megalug manufactured by EBAA Iron, Inc.

D. Fittings:

1. Fittings shall conform to AWWA C153 and shall have a pressure rating of not less than that specified for pipe.
2. Fittings shall be ductile iron.
3. Fittings for pipe with mechanical joints shall have mechanical joints.
4. Fittings for pipe with push-on joints shall have mechanical joints.
5. Include all specials, taps, plugs, flanges and wall fittings as required.
6. Service line fittings shall be as follows:
   a. Saddles - Brass, A. Y. McDonald Model 3802 or equal.
   b. Curb Stops - Ball type, female iron pipe thread, A. Y. McDonald Model 6101 or equal.

E. Lining:

1. Line all pipe, fittings and specials with cement lining where full pipe flow is present. Lining to extend from edge of plain end to the gasket seat in the bell socket.

F. Coating:

1. All buried iron pipe and fittings shall be coated with manufacturer's standard bituminous coating.

2.03 POLYVINYL CHLORIDE PRESSURE PIPE:

A. Design and Manufacture of Pipe:

1. PVC pipe shall conform to ASTM D 2241, pressure Class 200 with thickness class of SDR 21.

B. Fittings:

1. Fittings shall be ductile iron and conform to AWWA C153.

2. Fittings shall be mechanical joint.

C. Joints:

1. Joints of PVC pipe to PVC pipe shall be push-on type and meet the requirements of ASTM D 2241.

2. Joints of PVC pipe to ductile iron shall meet the requirements of ANSI A21.11 and AWWA C111.

3. Gaskets shall be synthetic rubber.

D. Service Line:

1. A single service connection shall be provided for each lot between the water main and the meter setter. The service line shall be a minimum 1-inch diameter 200 PSI, SDR-9 PE 3408, ASTM-D-2737-CTS-OD pipe.

2.04 GASKETS:

A. Provide all gaskets, bolts, lubricant, and other accessories required to install pipe, fittings and specials complete and ready for service.

PART 3 - EXECUTION

3.01 INSTALLATION: Specified in SECTION 02620.

3.02 FIELD TESTING: Specified in SECTION 02620.

END OF SECTION 02615.

SECTION 02620 - PIPE INSTALLATION AND TESTING

PART 1 - GENERAL

1.01 SUMMARY:

A. This Section includes:

1. Handling, installation and testing of pipe, fittings, specials and appurtenances as indicated or specified.

2. Concrete anchor and thrust blocks.

3. Sewer service connections.

4. Sewer lamp holes are prohibited.

B. Related Work Specified Elsewhere:

1. Manholes and Wetwells: SECTION 02605.

2. Sanitary Sewer Pipe: SECTION 02610.

3. Pressure Pipe: SECTION 02615.

4. Valves, Hydrants and Accessories: SECTION 02640.

5. Concrete: DIVISION 3.

C. See Standard Details for Thrust Block and Sewer Service Connection at the end of this Section.

1.02 REFERENCES:

A. Applicable Standards:

1. American Water Works Association (AWWA):

a. C600 - Installation of Ductile-Iron Water Mains and Their Appurtenances.

2. American Standard Testing and Materials (ASTM):

a. F1417 - Installation Acceptance of Plastic Gravity Sewer Lines Using Low-Pressure Air.

1.03 DELIVERY, STORAGE AND HANDLING:

A. Handle in a manner to ensure installation in sound and undamaged condition.

1. Do not drop or bump.

2. Use slings, lifting lugs, hooks, and other devices designed to protect pipe, joint elements, linings and coatings.

B. Ship, move, and store with provisions to prevent movement or shock contact with adjacent units.

C. Handle with equipment capable of work with adequate factor of safety against overturning or other unsafe procedures.

PART 2 - PRODUCTS

Specified in respective Sections, this Division.

PART 3 - EXECUTION

3.01 INSTALLATION - GENERAL:

A. Utilize equipment, methods, and materials ensuring installation to lines and grades indicated.

1. Maintain within tolerances specified or acceptable laying schedule.

a. Alignment: ±1 inch per 100 feet in open cut or tunnel.

b. Grade: ±1 inch per 100 feet.

2. Do not lay on blocks unless pipe is to receive total concrete encasement.

3. Accomplish horizontal and vertical curve alignments with bends, bevels, and joint deflections.

a. Limit joint deflection to one-half of manufacturer’s recommended maximum.

b. Use short specials preceding curves as required.

c. Curvilinear alignment of sewers larger than twenty-four inches (24") (61 cm) may be considered on a case-by-case basis provided compression joints are specified and ASTM or specific pipe manufacturers' maximum allowable pipe joint deflection limits are not exceeded. Curvilinear sewers shall be limited to simple curves which start and end at manholes. When curvilinear sewers are proposed, the minimum slope must be increased to provide a minimum velocity of two feet (2') per second (0.6 m/s) when flowing full.

4. Obtain acceptance of method proposed for transfer of line and grade from control to the work.

B. Install pipe of size, materials, strength class, and joint type with embedment indicated or specified for plan location.

C. Commence laying at downstream end of line and install pipe with bell ends in direction of laying. Obtain approval for deviations there from.

D. Clean interior of all pipe, fittings, and joints prior to installation. Exclude entrance of foreign matter during installation and at discontinuance of installation.

1. Close open ends of pipe with snug-fitting closures.

2. Do not let water control measures prove inadequate.

3. Remove water, sand, mud and other undesirable materials from trench before removal of end cap.

E. Brace or anchor as required to prevent displacement after establishing final position.

F. Perform only when weather and trench conditions are suitable. Do not lay in water.

G. Observe extra precaution when hazardous atmospheres might be encountered.

H. Tracer Wires: A minimum 12 gauge single strand conductive tracer wire shall be installed directly above and adjacent to all pressure pipe and water/sewer laterals during backfill operations. All wire splices shall be made with either rigid fittings or weatherproof connectors specifically designed for direct burial.

1. Tracer wires for water mains shall be extended to the surface into valve boxes at each gate valve and fire hydrant isolation valve. Construct additional access points as described herein to obtain a maximum spacing of access points of 1000 feet.

   a. A 4’ copper grounding rod shall be driven into the trench bottom at 1000 foot spacing and secured to the tracer wire with rigid fittings

2. Tracer wires for water laterals shall be rigidly affixed to the water main’s tracer wire and extended into each meter pit.

3. Tracer wires for sewer laterals shall extend from a minimum 1’ grounding rod driven into the trench bottom at the point of connection to the sewer main to the clean out. The tracer wire shall be extended to the surface adjacent to the clean out and housed within a protective enclosure constructed of schedule 40 PVC pipe and a schedule 40 PVC threaded clean out. The protective enclosure shall be extended to grade and installed so that it is easily accessible.

4. Tracer wires for all other pressurize pipe shall be extended to the surface within a protective enclosure construct out of a suitable length of 6 inch diameter class 200 PVC and a cast iron mushroom cap. This protective enclosure shall not be located within any driving or parking surface.

   a. A 4’ copper grounding rod shall be driven into the trench bottom at 1000 foot spacing and secured to the tracer wire with rigid fitting

I. Steep slope protection. Sewers on twenty percent (20%) slope or greater shall be anchored securely with concrete anchors or equal, spaced as follows:

1. Not over thirty-six feet (36') (11 m) center-to center on grades twenty percent (20%) and up to thirty-five percent (35%;

2. Not over twenty-four feet (24') (7.3 m) center-to-center on grades thirty-five percent (35%) and up to fifty percent (50%);

3. Not over sixteen feet (16') (4.9 m) center-to-center on grades fifty percent (50%) and over.

J. High velocity protection. Where velocities greater than fifteen feet (15') per second (4.6 m/s) are attained, special provision shall be made to protect against displacement by erosion and impact.

3.02 JOINTING:

A. General Requirements:

1. Locate joint to provide for differential movement at changes in type of pipe embedment, impervious trench checks and structures.

2. Perform conforming to manufacturer's recommendations.

3. Clean and lubricate all joint and gasket surfaces with lubricant recommended.

4. Utilize methods and equipment capable of fully homing or making up joints without damage.

5. Check joint opening and deflection for specification limits.

B. Special Provisions for Jointing Ductile-Iron Pipe:

1. Conform to AWWA C600.

2. Visually examine while suspended and before lowering into trench.

a. Paint bell, spigot, or other suspected portions with turpentine and dust with cement to check for cracks invisible to the eye.

b. Remove turpentine and cement by washing when test is satisfactorily completed.

3.03 CUTTING:

A. Cut in neat manner without damage to pipe.

B. Observe Specifications regarding joint locations.

C. Cut cast-iron, ductile-iron, and steel pipe with carborundum saw or other acceptable method per manufacturer's instructions.

1. Smooth cut by power grinding to remove burrs and sharp edges.

2. Repair lining as required and approved.

D. Cut PVC pipe with a fine toothed saw and mitre box or tube cutter. After cutting the end of the pipe shall be dressed to remove all roughness and sharp corners and beveled in accordance with the manufacturer’s instructions.

3.04 CLOSURE PIECES:

A. Connect two segments of pipeline or a pipeline segment and existing structures with short sections of pipe fabricated for the purpose.

B. Observe Specifications regarding location of joints, type of joints, and pipe materials and strength classifications.

C. Field-fabricated closures, where required, shall be concrete encased between adjacent flexible joints.

D. May be accomplished with solid sleeve.

3.05 TEMPORARY PLUGS:

A. Furnish and install temporary plugs at each end of work for removal by others when completed ahead of adjacent contract.

B. Plugs:

1. Test plugs as manufactured by pipe supplier.

2. Fabricated by Contractor of substantial construction.

3. Watertight against heads up to 20 feet of water, or 150% of test pressure, whichever is greater.
4. Secured in place in a manner to facilitate removal when required to connect pipe.

3.06 WATER SERVICE LINE:

A. Developer shall install a minimum 1-inch diameter, SDR-9, 200 PSI roll tubing water service line from main line to roadway right-of-way, for each service connection. All service lines shall be bedded in conformance with Section 02222-3.02.

B. Connect water service line to main line with brass saddle.

C. Connect water line to saddle with female iron pipe thread curb stop valve.

D. Install meter box, lid and meter setter in accordance with Figure 02620-3 and Figure 02620-4.

3.07 CONNECTIONS TO EXISTING STRUCTURES:

A. Connect pipe to existing structures and pipelines where indicated.

B. Prepare structure by making an opening with at least 3 inches clearance all around fitting to be inserted or as indicated.

C. Observe pertinent articles of Specifications pertaining to joint locations and closures.

D. Repair wall opening with concrete or as indicated.

E. Connections of new sanitary sewer pipe to existing manholes shall be made with a field cast A-Lok flexible connection.

3.08. CONCRETE ANCHOR AND THRUST BLOCKS:

A. Install at tees, elbows, bends, for steep slope protection (3.01 I) and dead ends where indicated.

B. Place against undisturbed earth or rock.

C. Of design indicated or specified.

1. Removable thrust blocks shall be constructed by utilizing a sheet of 1/4-inch plywood to prevent concrete adherence to pipe, fittings or accessories.

2. Apply two coats of coal tar coating to minimum 20 mils dry film thickness on anchor bars, straps and hardware.

3.09. SEWER SERVICE CONNECTIONS:

A. Install one sewer service connection, at locations indicated on the drawings, for future connection of building lateral to main sewer.

B. Sewer Service connections installed coincidentally with the main shall be gasketed “tees” or “wyes” of the same grade of pipe as the main.

C. Sewer Service connections installed subsequentially to the main shall be “inserta tee” as manufactured by the Inserta Fittings Co., or an approved equal. The fitting shall be supported by flowable fill as specified in 02222-2.04. The flowable fill shall completely encase the service fitting and main and extend to a minimum of one foot above the point of connection to the main. Granular pipe embedment shall be used for an additional one lift foot.

D. Install lateral to ten (10’) feet beyond right-of-way, permanent easement or property line, reference figure 02620-2.

E. Provide bell, with removable plug, at end of line.

3.10 SEPARATION OF WATER MAINS WITH SANITARY AND SEWERS:

A. Horizontal Separation:

1. Water mains shall be laid at least 10 feet horizontally from any existing or proposed sanitary sewer line. The distance shall be measured edge to edge and includes sanitary manholes.

2. If local conditions prevent a horizontal separation of 10 feet, a waterline may be laid closer than 10 feet to a sanitary sewer of force main provided that the waterline is laid in a separate trench or on an undisturbed earth shelf located on one side of the sewer line and at such an elevation that the bottom of the waterline is at least 18 inches above the top of the sewer line. In areas where the recommended separation cannot be obtained, the sewer line shall be constructed of ductile iron pipe (DIP) with slip-on or mechanical joints or the sewer line continuously encased and be pressure tested to 150 psi to assure water tightness. Pressure testing shall be conducted in accordance with paragraph 3.11 Field Testing – B. Acceptance Tests for Pressure Pipelines.

B. Vertical Separation:

1. Where waterlines cross sanitary sewers or force mains, the waterline shall be laid to provide a minimum vertical separation of 18 inches between the outside of the water pipe and the outside of the sewer pipe. This shall apply whether the water main is above or below the sewer line.

2. At crossings, the full length of water pipe shall be located so both joints will be as far from the sewer as possible but in no case less than 10 feet. Where a water main crosses under a sewer, adequate support shall be provided for the sewer to maintain line and grade. In other areas where the recommended separation cannot be obtained, one of the following methods must be required:

   a. The sewer shall be constructed equal to the water pipe and be pressure tested to 150 psi in accordance with Section 3.11 Field Testing – B. Acceptance Tests for Pressure Pipe, or

b. Either the water main or sewer line shall be continuously encased or enclosed in a watertight carrier pipe which extends ten feet (10’) on both sides of the crossing, measured perpendicular to the water main. The carrier pipe shall meet the requirements contained in Section 02615 – Pressure Pipe.

C. Special Conditions:

1. No waterline shall be located closer than 25 feet to any on-site disposal facility, agricultural waste facility or landfill.

2. Waterlines which cross surface waterways shall meet the requirements of Section 8.7 of Missouri Department of Natural Resources “Design Guide for Community Water Systems”.

3. All appropriate construction parameters shall be included on the construction drawings.

D. Construction Materials for Stream Crossings:

1. Materials: Sewers entering or crossing streams shall be constructed of ductile iron pipe with mechanical joints; otherwise, they shall be constructed so they will remain watertight and free from changes in alignment or grade. Material used to backfill the trench shall be stone, coarse aggregate, washed gravel, or other materials which will not readily erode, cause siltation, damage pipe during placement, or corrode the pipe.

2. Siltation and erosion: Construction methods that will minimize siltation and erosion shall be employed. The design engineer shall include in the project specifications the method(s) to be employed in the construction of sewers in or near streams. Such methods shall provide adequate control of siltation and erosion by limiting unnecessary excavation, disturbing or uprooting trees and vegetation, dumping of soil or debris, or pumping silt laden water into the stream. Specifications shall require that clean-up, grading, seeding, planting, or restoration of all work areas shall begin immediately. Exposed areas shall not remain unprotected for more than seven (7) days.

3. Aerial Crossings:

   a. Support shall be provided for all joints in pipes utilized for aerial crossings. The supports shall be designed to prevent frost heave, overturning, and settlement.

   b. Precautions against freezing, such as insulation and increased slope, shall be provided. Expansion jointing shall be provided between above-ground and below-ground sewers. Where buried sewers change to aerial sewers, special construction techniques shall be used to minimize frost heaving.

   c. For aerial stream crossings, the impact of flood waters and debris shall be considered. The bottom of the pipe should be placed no lower than the elevation of the fifty (50)-year flood.

   d. Aerial crossings shall be constructed of ductile-iron pipe with mechanical joints; otherwise, they shall be constructed so that they will remain watertight and free from changes in alignment or grade.

4. Sewer outfalls, headwalls, manholes, gate boxes, or other structures shall be located so they do not interfere with the free discharge of flood flows of the stream.

3.11 FIELD TESTING:

A. Acceptance Tests for Gravity Sanitary Sewer:

1. General:

a. All sewers shall be visually inspected, mandrelled and tested for infiltration and exfiltration.

b. Exfiltration testing shall be achieved by a low pressure air leakage test.

c. The Contractor shall furnish all labor, equipment, tools and materials and shall perform all acceptance tests.

d. All tests shall be witnessed and recorded by City Personnel.

2. Alignment:

a. Sewer shall be inspected (lamped) by flashing a light between manholes or by physical passage where space permits.

b. Contractor shall clean pipe of excess mortar, joint sealant and other dirt and debris prior to inspection.

c. Determine from Lamping or Physical Inspection:

(1) Presence of any misaligned, displaced, or broken pipe.

(2) Presence of visible infiltration or other defects.

d. Correct defects as required prior to conducting leakage tests.

3. Leakage Tests: The leakage tests shall be performed on the full length of all sewer lines prior to acceptance.

a. Air leakage testing. The Contractor shall perform low pressure air testing of the sewer lines for exfiltration testing. Air testing shall comply with ASTM F1417.

The general testing procedure shall be as follows: Raise pressure to 4.0 psi in sections being tested, throttle the air supply to maintain between 4.0 and 3.5 psi for at least 2 minutes in order to allow equilibrium between air temperature and pipe walls to be obtained. After temperature has stabilized, allow the pressure to decrease to 3.5 psi. At 3.5 psi begin timing to determine the time required for pressure to drop to 2.5 psi. If the time for the air pressure to decrease from 3.5 to 2.5 psi is greater than that shown in the table below, the pipe shall be presumed free of defects.

Pipe Size (in.)	Required Time for Length (min:sec) 100 L.F.	200 L.F.	300 L.F.	400 L.F.
8	7:34	7:34	7:36	10:08
10	9:26	9:26	11:52	16:49
12	11:20	11:24	17:05	22:47
15	14:10	17:48	26:42	35:36
18	17:00	25:38	38:27	51:16
21	19:50	34:54	62:21	69:48

If air test fails to meet above requirements, repeat test as necessary after all leaks and defects have been repaired.

In areas where ground water is known to exist, increase the test pressure by 0.43 psi for each foot of depth that the ground water is above the top of the pipe.

b. Manhole Testing: The Contractor shall perform a vacuum exfiltration test on each manhole. Vacuum testing equipment shall be as manufactured by Cherne Industries, P.A. Glazier, Inc. or approved equal.

Vacuum testing shall be conducted following manhole construction, including connection to piping and setting of the lid and frame. No grout shall be placed in horizontal joints until manhole has passed the vacuum test. All lifting holes shall be grouted. Manholes which fail the test shall be reconstructed as required to adequately seal the manhole. Grouting of leak from the interior or exterior will not be acceptable.

Plug all pipe entering manhole. Securely brace all plugs as required. Install testing lead in manhole frame and inflate seal in accordance with manufacturer's recommendation. A vacuum of 10 inches of mercury shall be drawn and the vacuum pump shut off. With all valves closed, measure the time required for the vacuum to drop to 9 inches of mercury. The manhole shall pass if the time is greater than 120 seconds for a 48-inch diameter manhole and 150 seconds for a 60-inch diameter manhole.

If manhole fails the test, perform necessary repairs and retest until an acceptable test meeting the above requirement is achieved.

4. Mandrel Testing:

   a. Mandrel testing shall not be conducted prior to 30 days after backfilling is complete.

   b. Each reach of PVC gravity sewer shall be checked for excessive deflection by pulling a mandrel through the pipe.

   c. Mandrel shall be provided by Contractor.

   d. The rigid ball or mandrel used for the deflection test shall have a diameter not less than ninety-five percent (95%) of the base inside diameter or average inside diameter of the pipe depending on which is specified in the ASTM specification, including the appendix, to which the pipe is manufactured. The test shall be performed without mechanical pulling devices. A mandrel must have nine (9) or more odd number of flutes or points.

e. Pipe with diametral deflection exceeding 5 percent shall be uncovered and the bedding and backfill replaced to prevent excessive deflection.

f. Repaired pipe shall be retested after repair.

g. Contractor shall submit all deflection test results to the Engineer.

B. Acceptance Tests for Pressure Pipelines:

1. Perform hydrostatic pressure and leakage tests.

a. Conform to AWWA C600 procedures.

(1) As modified herein.

(2) Shall apply to all pipe materials specified.

b. Perform after backfilling.

2. Test separately in segments between sectionalizing valves, between a sectionalizing valve and a test plug, or between test plugs.

a. Select test segments such that adjustable seated valves are isolated for individual checking.

b. Contractor shall furnish and install test plugs.

(1) Including all anchors, braces, and other devices to withstand hydrostatic pressure on plugs. Bracing against structure walls is not allowed.

(2) Be responsible for any damage to public or private property caused by failure of plugs.

3. Limit fill rate of line to available venting capacity. Fill rate shall be regulated to limit velocity in lines when flowing full to not more than 1 fps.

4. Contractor shall make arrangements with utility owner for water required for testing at lowest rate step.

5. Pressure and Leakage Test:

   a. Test pressure shall not be less than 150 psi at the highest point along the test section.

   b. Be at least 2-hour duration. Maintain pressure throughout test ±5 psi of test pressure.

   c. Leakage test shall be conducted concurrently with the pressure test.

   d. Acceptable when leakage does not exceed that determined by the following formula:

      Q = 0.0075 DLN
      Q = maximum permissible leakage in gallons per hour
      L = length of pipe tested in thousand feet
      D = nominal internal diameter of pipe being tested in inches
      N = square root of the average test pressure in Psig

   e. When testing against closed metal-seated valves, an additional leakage per closed valve of 0.0078 gal/hr/in of nominal valve size shall be allowed.

   f. When hydrants are in the test section, the test shall be made against the closed hydrant.

   g. Repeat test as necessary.

      (1) After location of leaks and repair or replacement of defective joints, pipe, fittings, valves or hydrants. All visible leaks are to be repaired regardless of the amount of leakage.

      (2) Until satisfactory performance of test.

   h. Engineer and City shall witness pressure and leakage test.

END OF SECTION 02620

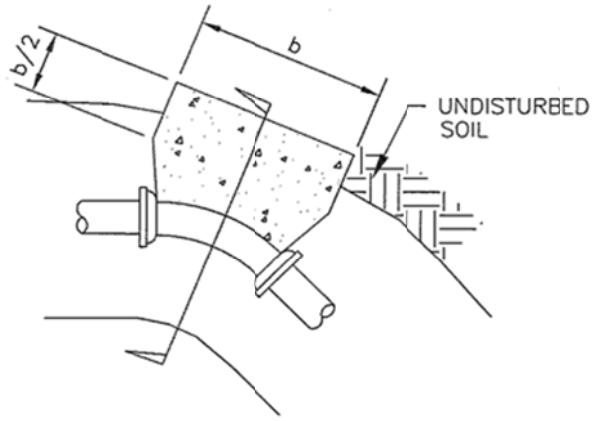

PLAN

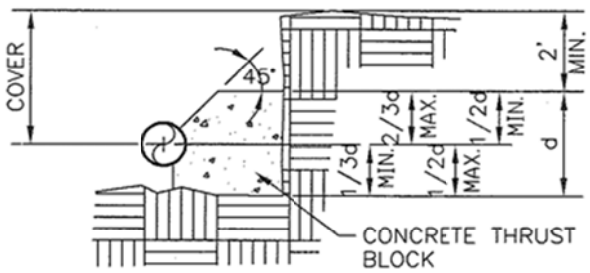

SECTION

NOTES:

1. AREA OF BLOCK $A = b \times d$
2. $b = d = \sqrt{A}$ EXCEPT WHERE TOP OF BLOCK IS WITHIN 2 FEET FROM GROUND SURFACE, THEN $b = A/d$
3. MINIMUM BLOCK DIMENSION (b&d) SHALL BE AT LEAST O.D. OF PIPE OR 1 FOOT FOR PIPE O.D. 12" OR LESS
4. BOTTOM OF BLOCK SHALL EXTEND TO BOTTOM OF TRENCH
5. BLOCK AREA BASED ON SILTY CLAY SOIL, 3 FEET OF COVER AND TEST PRESSURE OF 150 PSI AT HIGH POINT.

THRUST BLOCK AREAS

PIPE SIZE	22-1/2°	45°	90°	DEAD END
6"	2 SQ. FT.	2 SQ. FT.	5 SQ. FT.	7 SQ. FT.
8"	2 SQ. FT.	5 SQ. FT.	9 SQ. FT.	14 SQ. FT.
10"	3 SQ. FT.	8 SQ. FT.	16 SQ. FT.	22 SQ. FT.

CITY OF REPUBLIC	THRUST BLOCK DETAIL	FIGURE 02620-1

Figure 19: THRUST BLOCK DETAIL FIGURE 02620-1

NOTE:
TEES ARE REQUIRED FOR ALL LATERALS ON NEW SEWER LINES. ALL LATERALS SHALL BE SCHEDULE 40 PVC PIPE AND JOINTS SHALL BE GLUED WITH AN APPROVED ADHESIVE.

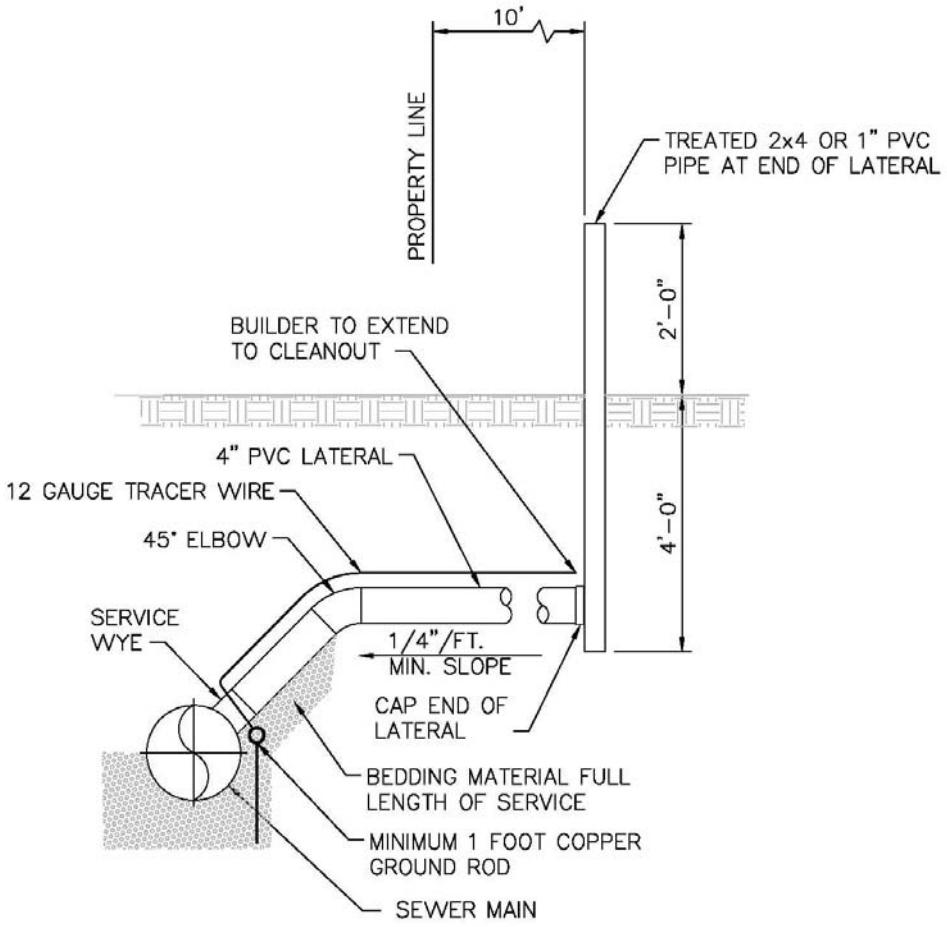

CONNECTION TO SEWER LINE

CITY OF REPUBLIC	STANDARD SEWER SERVICE CONNECTION	FIGURE 02620-2

Figure 20: STANDARD SEWER SERVICE CONNECTION FIGURE 02620-2

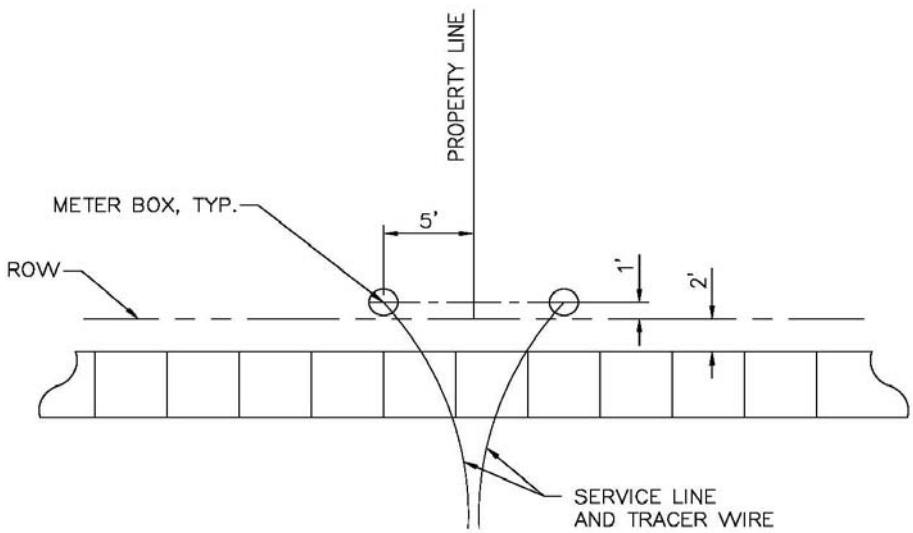

RESIDENTIAL METER LOCATIONS

CITY OF REPUBLIC	WATER SERVICE DETAIL	FIGURE 02620–3

Figure 21: WATER SERVICE DETAIL FIGURE 02620-3

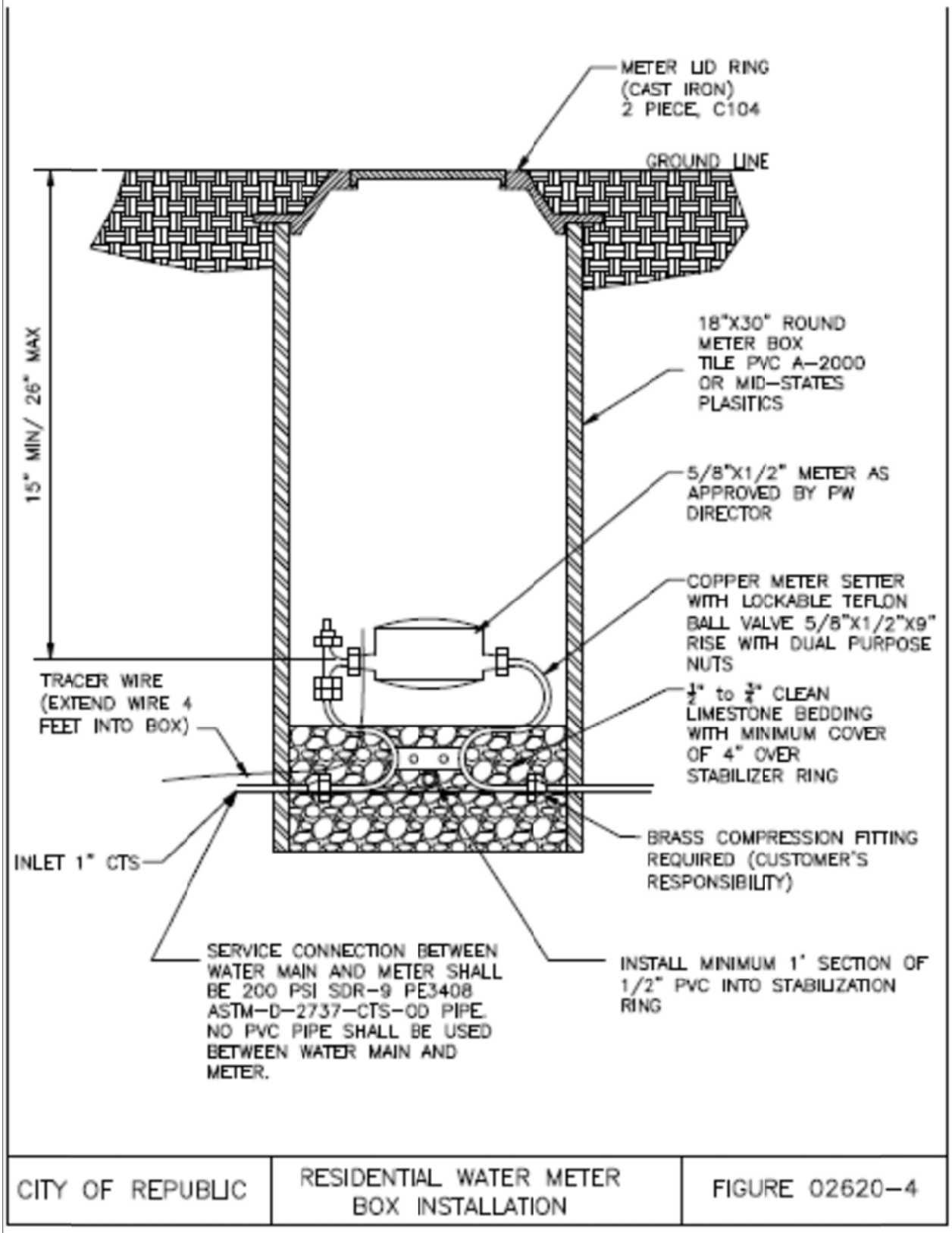

Figure 22: RESIDENTIAL WATER METER BOX INSTALLATION FIGURE 02620-4

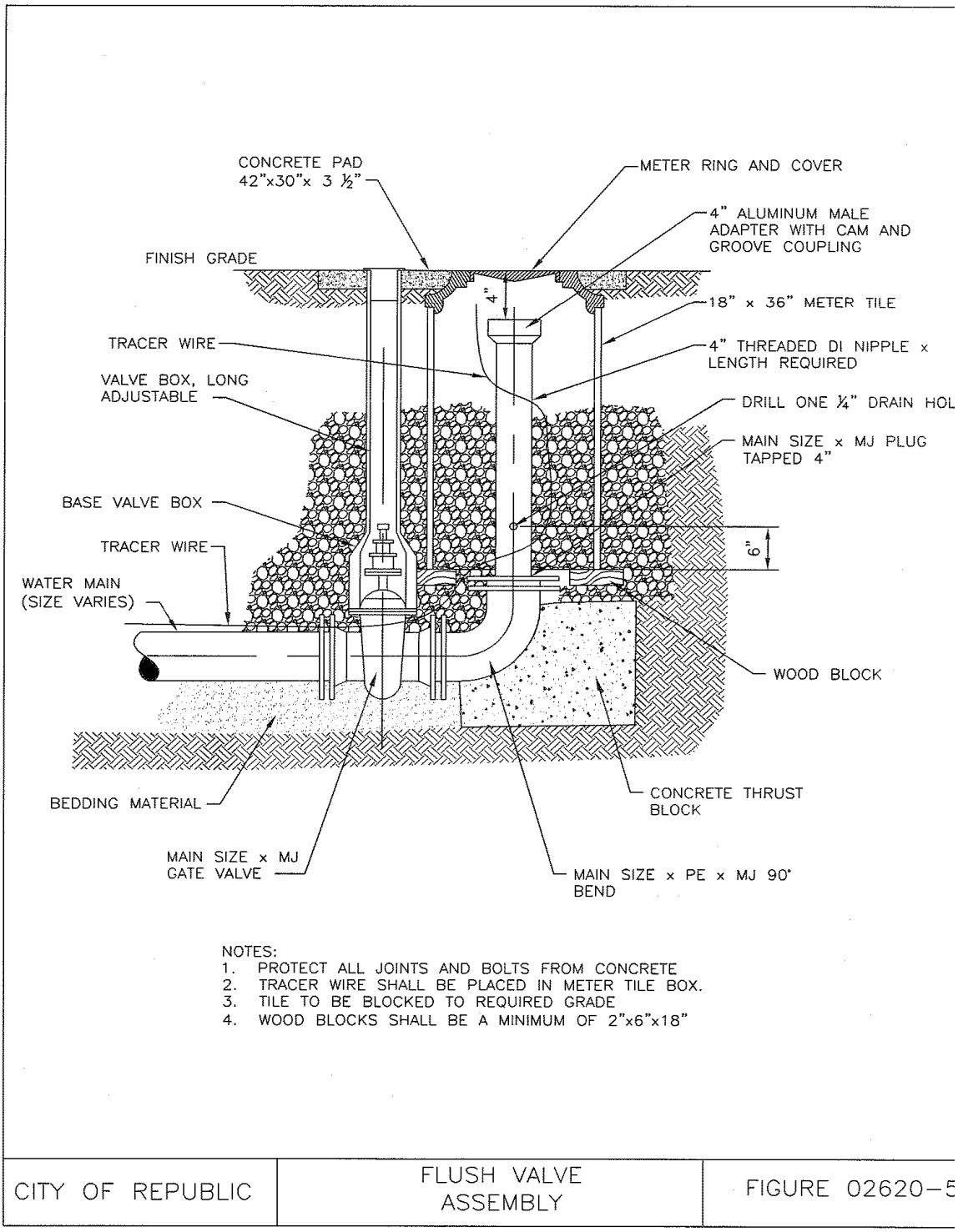

Figure 23: FLUSH VALVE ASSEMBLY FIGURE 02620-5

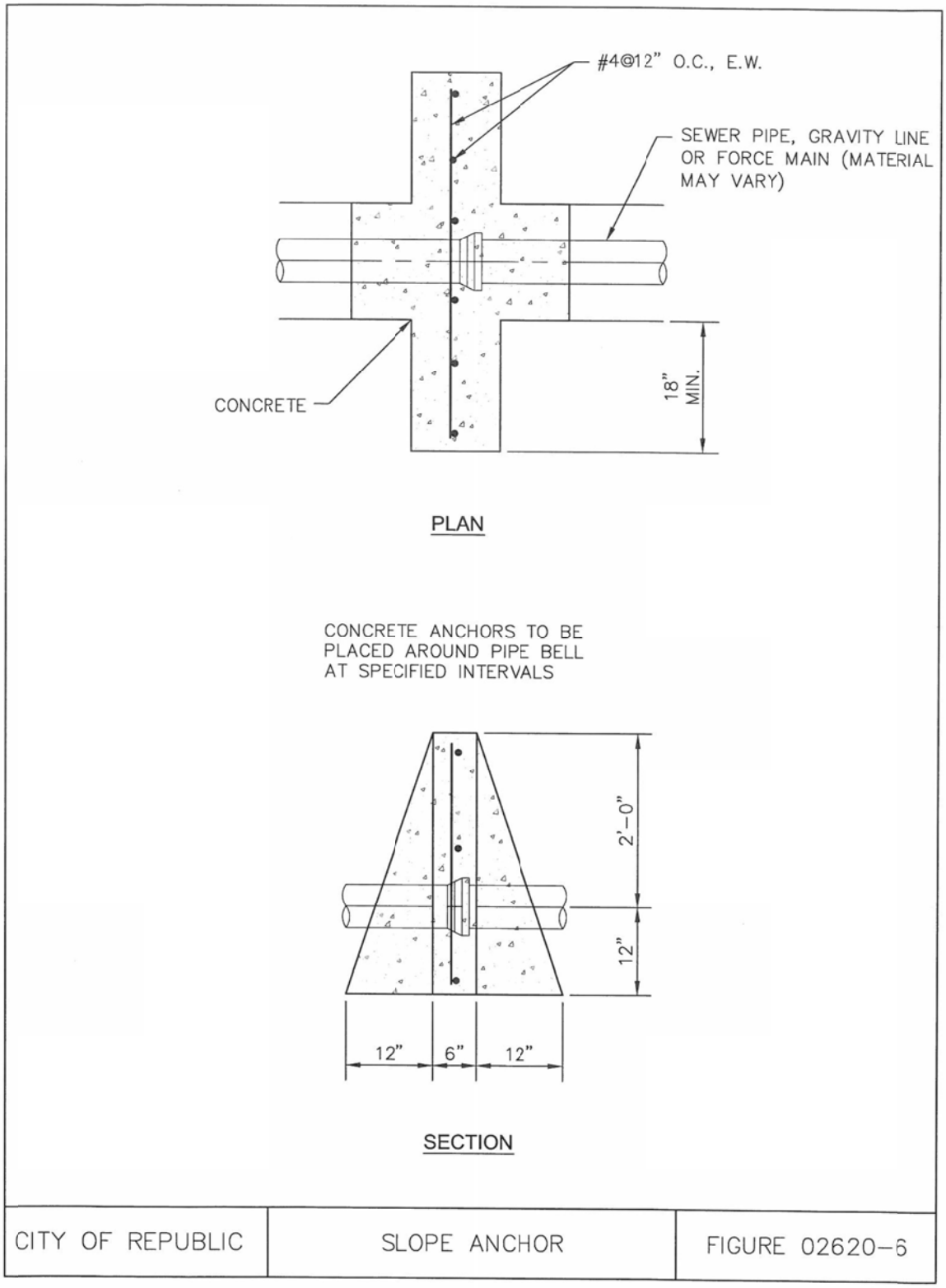

Figure 24: SLOPE ANCHOR FIGURE 02620-6

SECTION 02640 - VALVES, HYDRANTS AND ACCESSORIES

PART 1 - GENERAL

1.01 SUMMARY:

A. This Section includes all valves and accessories.

B. Related Work Specified Elsewhere:

1. Pipe Installation and Testing: SECTION 02620.

C. See Standard Detail for Fire Hydrant at the end of this Section.

1.02 REFERENCES:

A. Applicable Standards:

1. American Society for Testing and Materials (ASTM):

a. A126 - Gray Iron Castings for Valves, Flanges and Pipe Fittings.

b. A276 - Specification for Stainless and Heat Resisting Steel Bars and Shapes.

c. A536 - Ductile Iron Castings.

d. A564 - Hot-Rolled and Cold-Finished Age-Hardening Stainless and Heat Resisting Steel Bars, Wire, and Shapes.

2. American Water Works Association (AWWA):

a. C111 - Rubber-Gasket Joints for Ductile-Iron Pressure Pipe and Fittings.

b. C550 - Protective Epoxy Interior Coatings for Valves and Hydrants.

c. C502 - Dry Barrel Fire Hydrants.

d. C509 - Resilient Seated Gate Valves for Ordinary Water Works Service.

1.03 SUBMITTALS:

A. Submit as specified in DIVISION 1.

B. Include, but not limited to, the following:

1. Catalog data or illustrations showing principal dimensions, parts and materials.

2. Spare parts list referenced to illustration of parts.

3. Assembly and disassembly or repair instructions.

4. Dimensions of the clearance required for butterfly valve discs.

C. Certificates and Affidavits: Furnish prior to shipment. Include the following:

1. Test certificates.

2. Affidavit of compliance with applicable AWWA Standard.

1.04 QUALITY ASSURANCE:

A. Manufacturers shall be experienced in the design and manufacture of specific valves and accessories for a minimum period of 5 years.

1.05 DELIVERY, STORAGE, AND HANDLING:

A. Ship all valves with suitable end covers to prevent entrance of foreign material into valve body.

B. Protect valves from damage.

1.06 WRENCH NUTS:

A. Wrench nuts shall be provided on all buried valves.

B. All wrench nuts shall comply with Section 3.16 of AWWA C500.

C. Contractor shall provide two operating keys (T-bars) for operation of the wrench nuts.

1.07 ROTATION:

A. Direction of rotation of the wrench nut to open the valve shall be to the left (counterclockwise).

B. Each valve body shall have cast thereon the word "OPEN" and an arrow indicating the direction to open.

1.08 ENDS:

A. All 3-inch or larger buried valves shall have mechanical joint ends unless otherwise specified.

B. All 2-1/2 inch or smaller valves shall have threaded ends.

C. Mechanical joints shall conform to ANSI A21.11.

PART 2 - PRODUCTS

2.01 GATE VALVES:

A. Acceptable Manufacturers:

1. Clow Corporation.

2. Mueller.

3. Keystone Valve USA, Inc.

B. All gate valves shall conform to AWWA C509.

C. All gate valves shall be resilient seated wedge type.

D. All gate valves shall be non-rising stem type with "O"-ring seals.

E. All gate valves shall be mounted in the vertical position.

2.02 ECCENTRIC PLUG VALVES:

A. Acceptable Manufacturers:

1. DeZurik, a unit of General Signal Corporation.

2. Henry Pratt Company.

3. Keystone Valve USA, Inc.

B. Design:

1. Quarter-turn nonlubricated eccentric type with resilient faced plug. Valves with vane type seat rings are not acceptable. Shutoff up to specified rating with pressure in reverse direction.

2. Flanged valve ends shall be faced and drilled to conform to ANSI B16.1, Class 125 for thickness and drilling.

3. Mechanical or push-on type rubber-gasketed joint ends shall conform to AWWA C111.

4. Port areas of valves shall be at least 80% of full pipe area.

5. Plugs shall be eccentric type with no backing ring or frame.

6. Valve body cavity shall be smooth without protrusions or baffles.

C. Materials and Construction

1. Bodies shall be of ASTM A126, Class B cast iron or ductile iron, ASTM A536.

2. Valve plug shall be ASTM A126, Class B cast iron or ASTM A536 ductile iron. Resilient plug facing or replaceable style body seats shall be neoprene or Buna N compound suitable for use with water and wastewater applications.

3. Seat rings shall be threaded, or welded of corrosion-resistant 18-8 stainless steel, nickel or Monel conforming to AWWA C504. Sprayed or plated mating seat surfaces are not acceptable.

4. Bearings shall be replaceable. Sleeve type and thrust bearings in the upper and lower journals shall be corrosion-resistant stainless steel or TFE.

5. Shaft seals shall be multiple O-ring or self-adjusting U-cup or chevron type packing conforming to AWWA C504. Pull-down packing is not acceptable.

6. Shaft seals shall be field adjustable or replaceable under pressure and without valve assembly.

7. All exposed fastening hardware shall be zinc plated or stainless steel.

D. Actuators:

1. Manual Actuators:

a. All valves shall open counterclockwise.

b. Provide indicators to show position of plug except on buried actuators.

c. Nut operators shall be AWWA 2-inch size for operation by valve key and wrench head lever. Furnish one lever for each valve.

d. Totally enclosed operator shall be provided on all 8-inch and larger valves.

E. Testing: Furnish certified copies of results of tests prior to shipment. All valves shall be subjected to an AWWA C504 procedure cycle life and pressure leak test at 150 psi and a body hydrostatic test at 300 psi. Valves shall be capable of providing drip-tight shutoff up to the full leak test rating. Certify reverse pressure capacity.

2.03 CHECK VALVES:

A. Acceptable Manufacturers:

1. American Valve and Hydrant.

2. Dresser.

3. Mueller.

B. Check valves for sewage pump discharges 4-inch and larger shall be of the unobstructed waterway, quick closing, spring-loaded, external level arm, horizontal swing type with iron body, flanged ends and bronze trim.

C. Hinge pins shall be stainless steel with both ends extending through bronze-bushed bearings and outside stuffing boxes with grease lubricated packing or O-ring seals.

D. Flanges shall be flat-faced with ANSI B16.1, Class 125 diameter and drilling.

2.04 FIRE HYDRANTS:

A. Acceptable Model/Manufacturer:

1. Centurian Model A423 by Mueller.

2. Medallion Model F2545 by Clow.

B. Fire hydrants shall conform to AWWA C502, Standard for dry-barrel fire hydrants.

C. Fire hydrant shall have a nominal 5-1/4 inch main valve with 6-inch mechanical joint inlet connection.

D. Outlet nozzles shall be National (American) fire hose coupling screw threads and be as follows:

1. Two - 2-1/2 inch hose nozzles.

2. One - 4-1/2 inch pumper nozzle.

E. Main valve shall be equipped with "O"-ring seals and shall open to the left (counterclockwise).

F. Fire hydrant shall be of the break-flange safety-top type.

2.05 VALVE BOXES:

A. Acceptable Manufacturers:

1. Clay and Bailey Manufacturing Company.

2. Clow Corporation.

3. Dresser Industries, Inc.

4. Mueller Company.

5. Neenah Foundry Company.

6. Tyler Company.

B. Provide for all buried valves.

C. Design:

1. Boxes shall be three-piece cast-iron slide type with 5-1/4-inch shaft.

3. Provide extension stem to bring operating nut within 3 feet of valve box top.

4. Drop cover shall be marked "WATER".

2.06 SHOP PAINTING:

A. Prepare surfaces and paint or coat all valves, fire hydrants, valve boxes, corporation stops, and all related accessories standard of the manufacturer unless otherwise indicated or specified herein.

B. Paint and coatings shall be suitable for the service intended.

C. Submit type of paint or coating proposed with drawings and data prior to fabrication.

2.07 FLUSH HYDRANTS

A. Acceptable Manufactures

1. Eclipse No. 2 by John C. Kupferle Foundry Company

2. Model A-411 Post Type Hydrant by Mueller Company

B. Design

1. Provide with self-draining, non-freezing compression type.

2. Single hose nozzle shall be 2-1/2″ IP.

2.08 BACKFLOW PREVENTOR

A. Acceptable Manufactures

1. Watts Double Check Backflow Assembly
2. Or Approved Equal

B. Four (4) Inch and larger Backflow Assemblies shall be located in a concrete vault on private property and as close to the water main as is practical.

C. See Figure 02640-2 for Detail.

PART 3 - EXECUTION

3.01 INSTALLATION:

A. Comply with provisions of AWWA C600 and as specified.

B. Thoroughly clean and remove all shipping materials prior to setting. Operate all valves from fully opened to totally closed.

C. Set fire hydrants with lowest nozzle 18 inches above finished grade. Check and fill stem bonnet lubricant reservoir.

3.02 FIELD TESTING:

A. Perform on piping and valves as specified in SECTION 02620.

END OF SECTION 02640

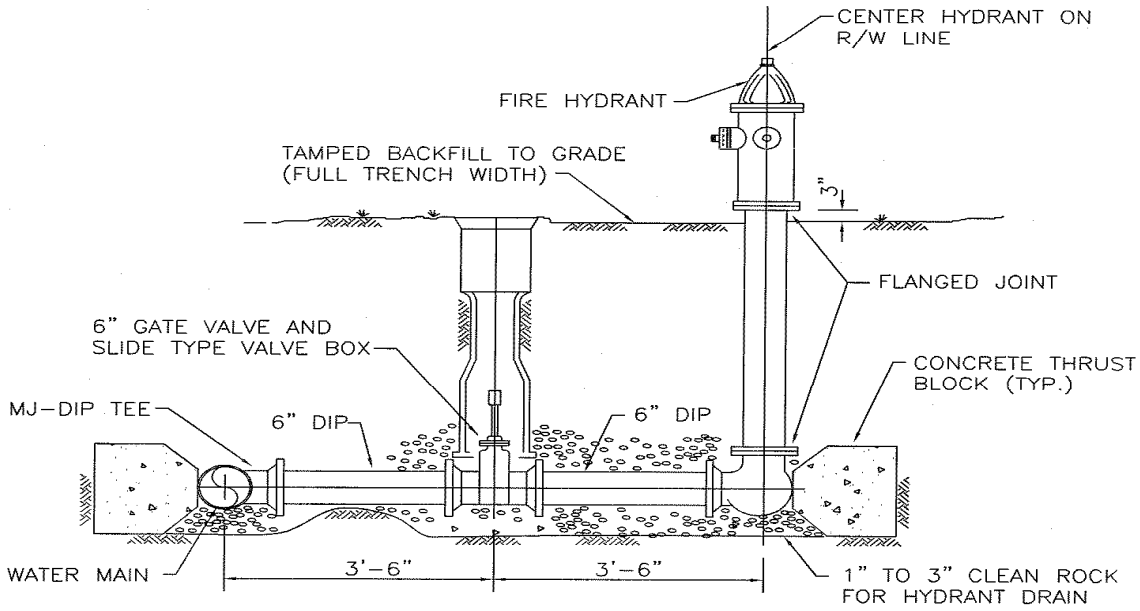

NOTES:
1. MJ RETAINER GLANDS AT EACH END, MAY BE SUBSTITUTED FOR CONCRETE THRUST BLOCKS.
2. WHERE HYDRANT LOCATED ON SAME SIDE OF STREET AS SIDEWALK, TOP OF VALVE BOX SHALL BE FLUSH WITH TOP OF SIDEWALK.

CITY OF REPUBLIC	FIRE HYDRANT DETAIL	FIGURE 02640-1

Figure 25: FIRE HYDRANT DETAIL FIGURE 02640-1

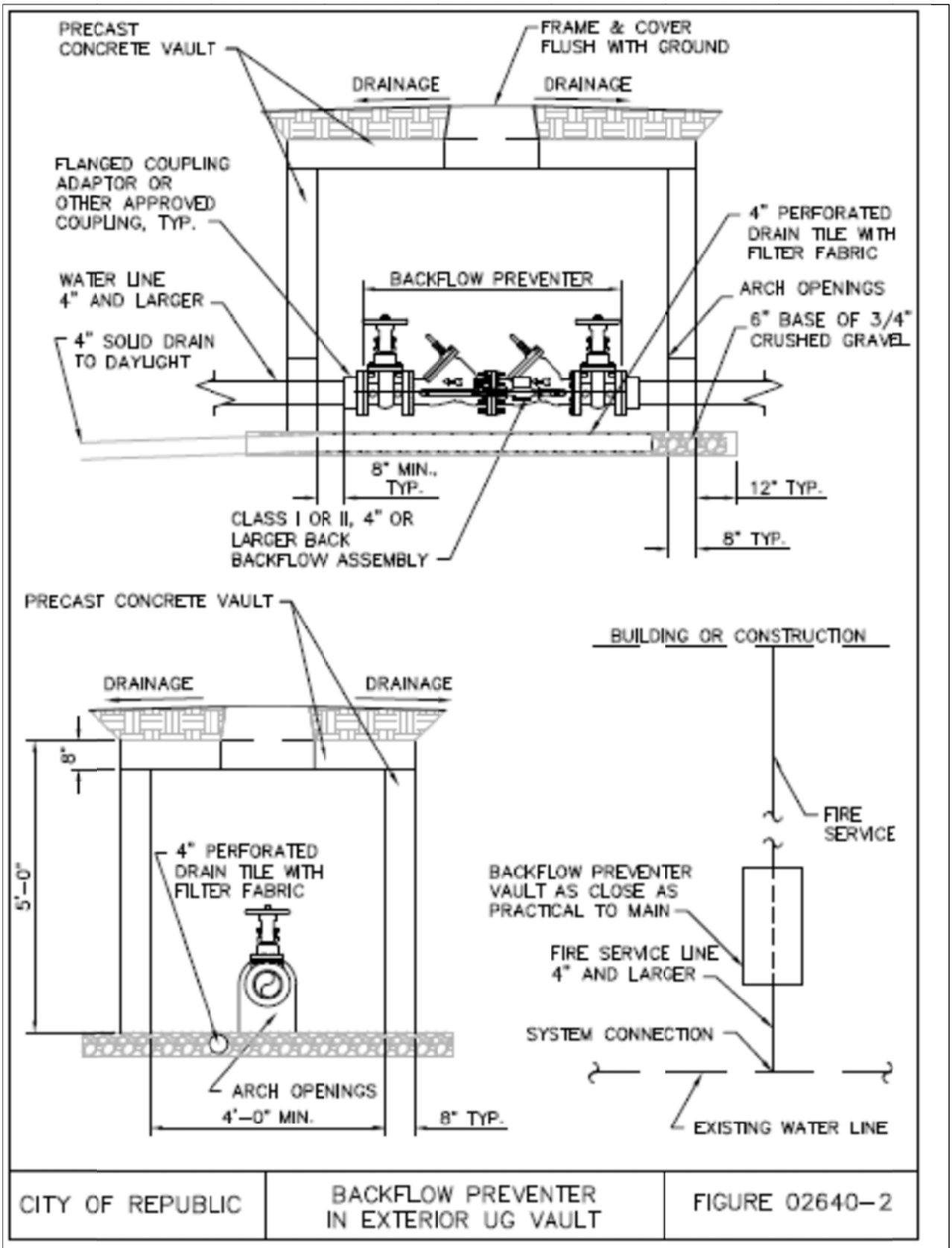

Figure 26: BACKFLOW PREVENTER IN EXT UG VAULT FIGURE 02640-2

SECTION 02675 – DISINFECTION OF PIPING

PART 1 – GENERAL

1.01 SUMMARY:

A. This section covers disinfection of potable water piping with a strong chlorine solution.

B. Disinfecting may be performed concurrently with pressure and leakage testing or after pressure and leakage testing at the Contractor's option.

C. All necessary disinfection equipment and materials shall be provided by the Contractor.

D. Related Work Specified Elsewhere:

1. Pipe Installation and Testing – Section 02620.

E. Disinfection work shall conform to the requirement of the latest version of AWWA C651, Standard for Disinfecting Water Mains as modified herein.

1.02 REFERENCES:

A. Applicable Standards

1. American Water Works Association

a. C651-99 – Standard for Disinfecting Water Mains.

b. B301 - Standard for Liquid Chlorine.

c. B300 - Standard for Hypochlorites.

1.03 SUBMITTALS:

A. Submit as specified in Division 1.

B. Includes, but not limited to the following:

1. Product data: Manufacturer's technical data, specification, safety precautions for chlorine products.

2. Results of bacteriological testing on each section of pipe.

PART 2 - PRODUCTS

2.01 CHLORINE:

A. Calcium Hypochlorite - 70 percent available chlorine.

B. Liquid chlorine - 99.5 percent available chlorine.

PART 3 - EXECUTION

3.01 FLUSHING:

A. All water lines shall be thoroughly flushed prior to disinfection at a velocity of not less than 3.0 feet per second.

B. Contractor shall verify that discharge points have adequate drainage to prevent flooding of surrounding area. Location of discharge point shall be approved by the City.

C. Flushing shall continue until discharge stream is visibly clean (clear) or three pipe volumes have been replaced, whichever is greater.

3.02 FEEDING:

A. Chlorine gas shall be used only as a solution. Introduction of chlorine gas into pipeline directly will not be permitted. Proper feeding operation shall utilize a chlorinator and booster pump with injector.

B. Calcium hypochlorite shall be made into a solution and pumped into the pipeline with a suitable chemical feed pump.

3.03 APPLICATION:

A. Pipeline shall be disinfected by the continuous feed method.

B. Required chlorine to produce 50 milligrams per liter concentration in 100 feet of pipes - by diameter shall be as follows:

Pipe Size (In.)	100 Percent Chlorine (lb.)	1 Percent Chlorine Solution (gal.)
4	0.027	0.33
6	0.061	0.73
8	0.108	1.30
10	0.170	2.04
12	0.240	2.88

C. Water from the existing distribution system shall be introduced at a constant measured rate into the newly-laid pipeline. The water shall receive a dose of chlorine which is fed at a constant measured rate.

1. The chlorine feed shall be proportioned to the rate of water flow into the pipeline so that the entering water contains at least 50 mg/l of available chlorine. Chlorine application shall be continuous until the entire pipeline is filled with the chlorine solution.

2. To assure that this concentration is maintained, the chlorine residual should be measured at regular intervals in accordance with the procedures described in the latest edition of Standard Methods for the Examination of Water and Wastewater or AWWA Manual M12 or using appropriate chlorine test kits.

3. Amount of chlorine required for each 100 feet of pipe of various diameters is indicated in paragraph 3.03(B) above. Solutions of 1 percent chlorine shall be prepared with calcium hypochlorite by mixing one pound of calcium hypochlorite with 8 gallons of water.

4. During the application of chlorine valves shall be positioned to prevent chlorine solution from flowing back into the line supplying the water. The chlorinated water shall be retained in the pipeline for at least 24 hours during which time all valves and hydrants in the section treated shall be operated to ensure disinfection of the appurtenances. At the end of the 24-hour period, the treated water in all portions of the pipeline shall have a residual of not less than 25 mg/l free chlorine.

3.04 FINAL FLUSHING:

A. After the applicable retention period, heavily chlorinated water shall be flushed from the pipeline until chlorine residual is no higher than that generally prevailing in the system.

B. Apply a chlorine reducing agent to the water to be wasted to neutralize the chlorine residual.

3.05 BACTERIOLOGICAL TEST:

A. After final flushing and before the water main is placed in service, samples shall be collected from the main, shall be tested for bacteriological quality in accordance with the Standard Methods for the Examination of Water and Wastewater and shall show the absence of coliform organisms.

1. At least two (2) samples shall be taken from each sample point with 24 hours separation between sets of samples. Both sets of samples shall show the absence of coliform organisms.

2. Samples points shall be as follows:

a. At 1200 foot intervals along the water main.

b. At the end of the water main.

c. At the end of each branch water main.

B. No hose or fire hydrant shall be used in collection of samples. A suggested combination blowoff and sampling tap consists of a standard corporation cock installed in the main with a copper-tube gooseneck assembly. After samples have been collected, the gooseneck assembly may be removed and retained for future use.

3.06 RE-DISINFECTION (REPETITION):

A. If the initial disinfection fails to produce two successive satisfactory bacteriological samples, the water main shall be re-chlorinated by the continuous-feed method of chlorination until two successive satisfactory results of the bacteriological testing are obtained.

END OF SECTION 02675 -

SECTION 02720 – STORM DRAINAGE SYSTEM

PART 1 - GENERAL

1.01 SUMMARY:

A. This Section includes storm drainage pipe and appurtenances.

B. Related Work Specified Elsewhere:

1. Site Preparation and Earthwork: SECTION 02200.

2. Trenching and Backfilling for Utilities: SECTION 02222.

3. Curbs, Gutters, Sidewalks, Median and Paved Drainage: SECTION 02525.

4. Concrete: DIVISION 3.

C. See the following Standard Details at the end of this Section:

1. Curb Inlets, 18” or less.

2. Curb Inlet, 21” or greater.

3. Top Slab Reinforcement.

4. Ring and Cover for Curb Inlets.

5. Concrete Culvert Cap For Driveways.

D. Minimum size stormwater pipe crossing streets shall be 18 inches.

1.02 REFERENCES:

A. Applicable Standards.

1. American Society for Testing and Materials (ASTM):

a. C76 - Reinforced Concrete Culvert, Storm Drain and Sewer Pipe.

b. C443 - Joints for Circular Concrete Sewer and Culvert Pipe, Using Rubber Gaskets.

c. F405 - Corrugated Polyethylene Pipe and Fittings.

d. F667 - Large Diameter Corrugated Polyethylene Pipe and Fittings.

2. American Water Works Association (AWWA).

a. M9 - Installation of Concrete Pipe.

1.03 SUBMITTALS:

A. Submit as specified in DIVISION 1.

B. Includes, but not limited to, the following:

1. Precast structures.

2. Cast-in-place structures.

3. Reinforced concrete pipe (certification only).

4. Corrugated (metal or polyethylene) pipe (certification only).

5. Joints and fittings (certification only).

PART 2 - PRODUCTS

2.01 REINFORCED CONCRETE:

A. Conform to applicable requirements of DIVISION 3.

B. Concrete shall be 4,000 psi concrete.

2.02 CORRUGATED METAL PIPE:

A. Pipe shall conform to AASHTO M36 and shall be of full-circle, lock-seam type. Coating shall be zinc or aluminum.

B. End sections shall be galvanized metal with toe plates.

C. All Corrugated metal pipe shall be of size, length and gauge thickness, and zinc or aluminum coating shall conform to MoDOT specifications Section 1020.

D. Coupling bands shall be of the same base metal as the pipe.

E. All Corrugated metal pipe shall be installed using Class B embedment as defined in Section 02222.

2.03 REINFORCED CONCRETE PIPE:

A. Design of circular pipe to conform to ASTM C76, Class III except as modified herein.

B. Furnish in lengths of not less than 4’-6", except fittings, closure pieces, and specials.

C. Joints shall be rubber and concrete to conform to ASTM C443. Rubber gaskets shall be O-ring cross section.

D. Select an independent testing laboratory to perform testing and inspection of all material except reinforcing steel. Laboratory shall be acceptable to City.

E. Storm sewers shall be designed for H-20 loadings.

F. Concrete Storm water Piping shall be bedded with a modified Class C embedment profile, where the granular bedding material is brought up from the trench floor to the spring line with hand placed material from spring line to 6-inches above the top of pipe.

2.04 CORRUGATED POLYETHYLENE PIPE:

A. Pipe and fittings shall conform to ASTM F405 and F667 and shall have a circular cross-section.

B. End sections shall be polyethylene flared type with toe plates.

C. Joints shall be provided with neoprene or manufacturer’s standard gaskets.

D. All Corrugated Polyethylene Pipe shall be installed using Class B embedment as defined in Section 02222.

PART 3 - EXECUTION

3.01 TRENCHING AND BACKFILLING: Perform trenching and backfilling of trenches as specified in SECTION 02222.

3.02 PIPE LOCATION:

A. All storm sewer having trench walls within 2 feet of the back of curb shall be backfilled with compacted granular materials.

B. Reinforced concrete pipe shall be used under paved areas.

C. Corrugated polyethylene pipe is permitted in locations outside of pavement areas.

3.03 PIPE INSTALLATION:

A. All pipe shall be carefully laid true to lines and grades indicated. Any pipe which is not in true alignment or which shows undue settlement after laying shall be taken up and re-laid at the Contractor's expense.

B. Corrugated Metal Pipe:

1. Install to conform to manufacturer's recommendations.

2. Lift or roll pipe to protect coating. Do not drag over gravel or rock. Avoid striking rocks or hard objects when lowering into trench.

a. Pipe on which coatings have been damaged may be rejected at the site of the Work regardless of previous approvals.

3. Join pipe sections with firmly bolted coupling bands of the same materials as the pipe.

C. Reinforced Concrete Pipe:

1. Install to conform to AWWA M9 and as follows:

2. Pipe jointing material shall be Ram-nek or equal.

3. Clean joints thoroughly, and coat bell-and-spigot and gasket with recommended lubricant before jointing.

4. Check position of rubber gasket with feeler prior to shoving pipe home.

5. Fill exterior pipe with a 1:2 cement mortar of pouring consistency and cover with a waterproof paper or cloth diaper wired in position. Rod mortar with a stiff wire curved to the radius of the pipe.

6. Fill interior of joint with stiff mix of 1:1 cement mortar troweled into place to provide a continuous smooth surface across joint (pipe 24 inches in diameter and larger).

D. Corrugated Polyethylene Pipe:

1. Installation to conform to ASTM D2321.

2. Clean joints thoroughly, and coat bell, spigot and gasket with recommended lubricant before jointing.

3.04 STORM DRAINAGE STRUCTURES:

A. Reinforced Portland Cement Concrete:

1. All reinforced portland cement concrete storm drainage structures shall have a paved invert and a smooth grade from pipe invert to pipe invert in structures having more than one pipe.

2. Cast-In-Place: Conform to all applicable requirements of DIVISION 3.

3. Precast: Structures shall be of precast construction where indicated or as approved by Engineer. Precast structures shall have cast-in-place reinforced concrete base conforming to DIVISION 3.

4. Curb inlet boxes shall be placed to match the slope of the centerline and adjacent curb line.

END OF SECTION 02720

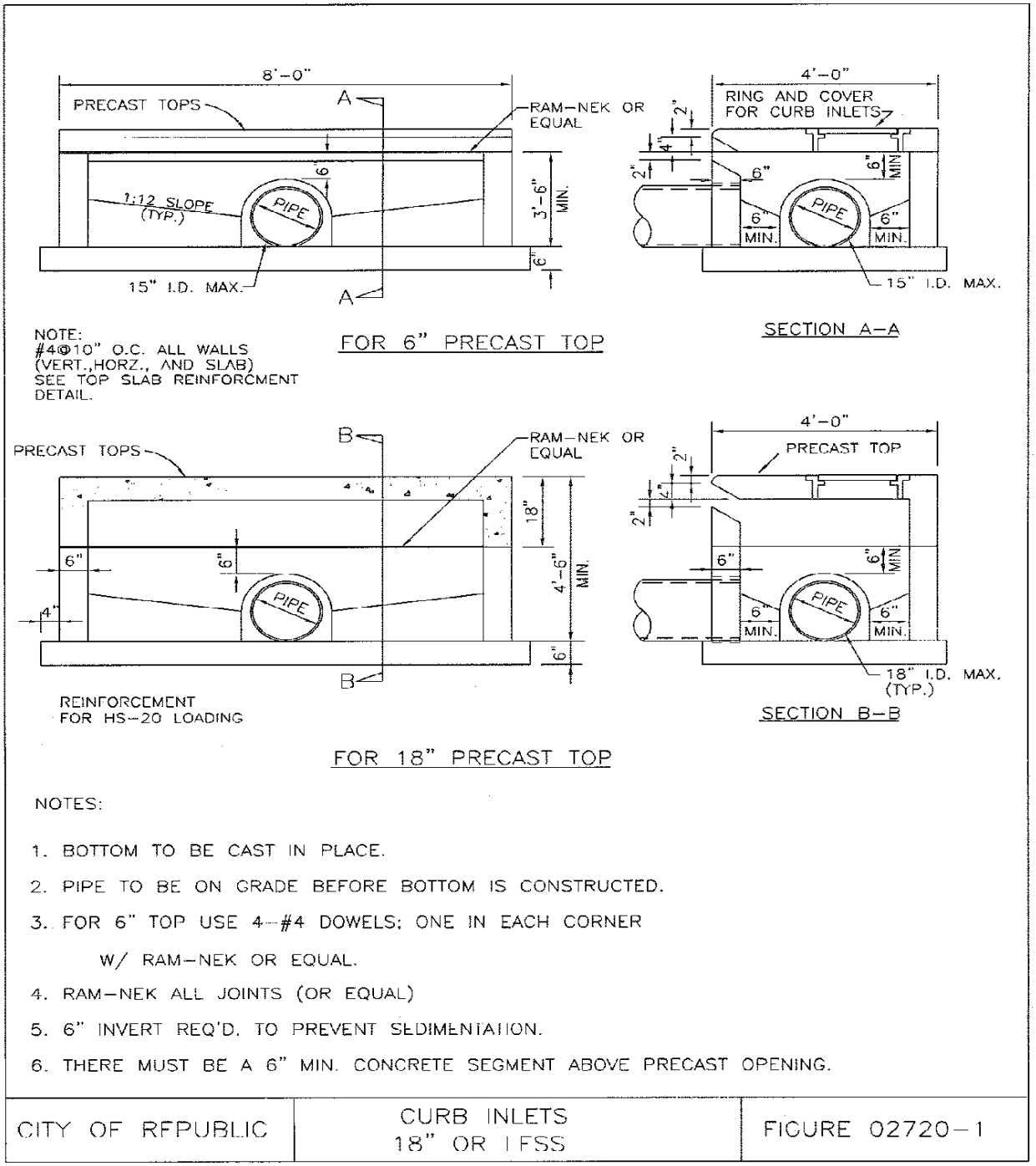

NOTES:

1. BOTTOM TO BE CAST IN PLACE.
2. PIPE TO BE ON GRADE BEFORE BOTTOM IS CONSTRUCTED.
3. FOR 6" TOP USE 4-#4 DOWELS; ONE IN EACH CORNER W/ RAM-NEK OR EQUAL.
4. RAM-NEK ALL JOINTS (OR EQUAL)
5. 6" INVERT REQ'D. TO PREVENT SEDIMENTATION.
6. THERE MUST BE A 6" MIN. CONCRETE SEGMENT ABOVE PRECAST OPENING.

CITY OF REPUBLIC	CURB INLETS 18" OR LESS	FIGURE 02720-1

Figure 27: CURB INLETS 18" OR LESS FIGURE 02720-1

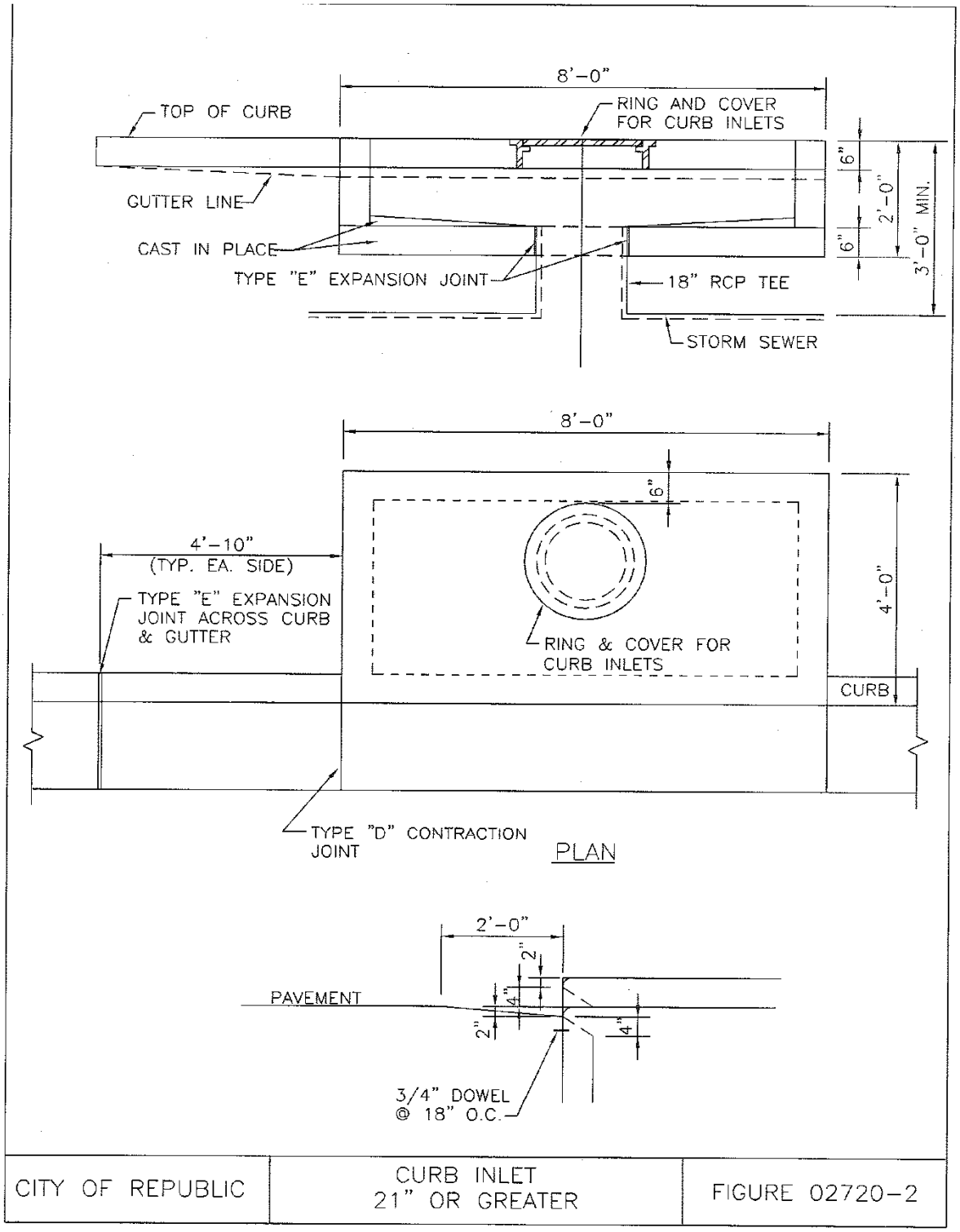

Figure 28: CURB INLET 21" OR GREATER FIGURE 02720-2

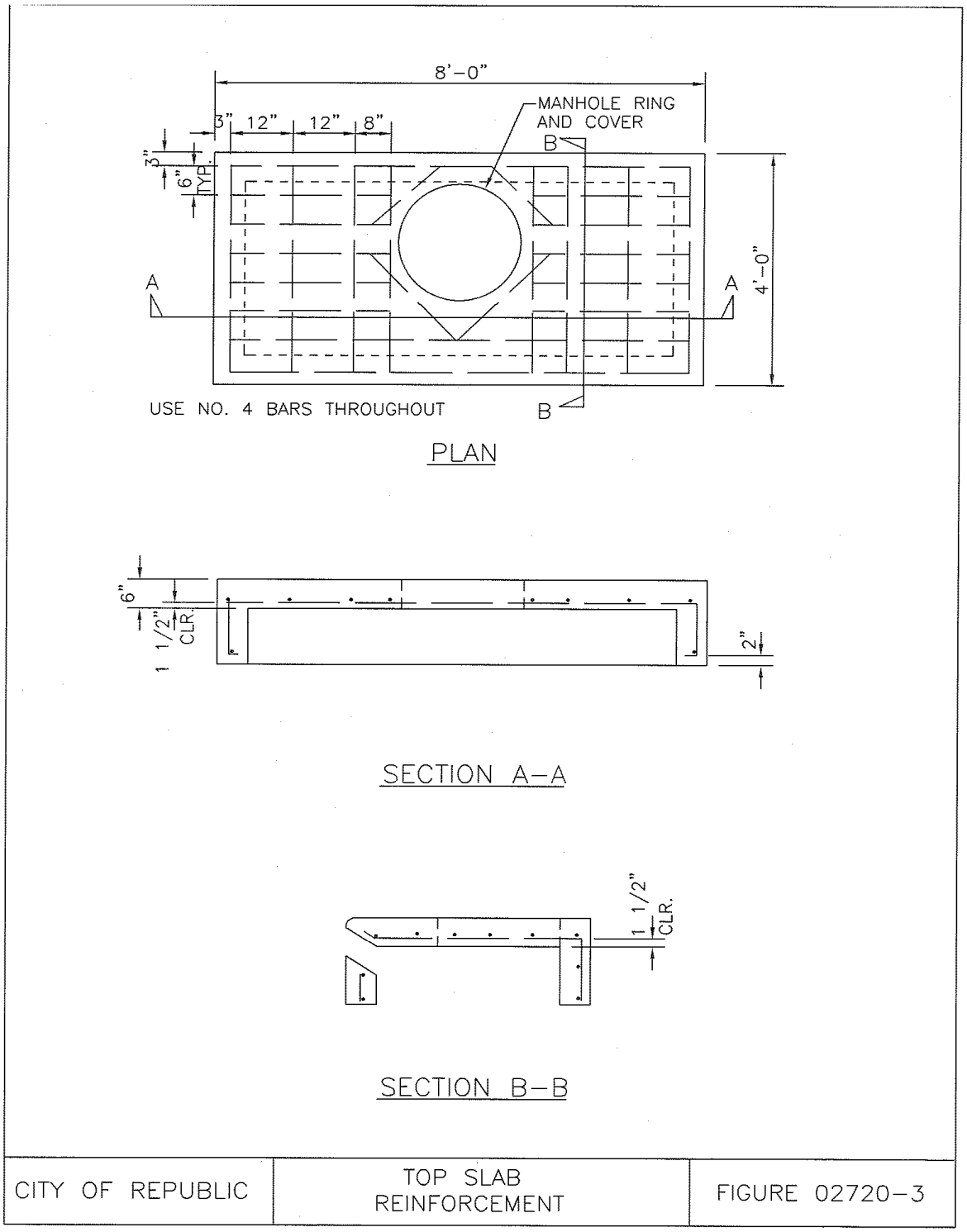

Figure 29: TOP SLAB REINFORCEMENT FIGURE 02720-3

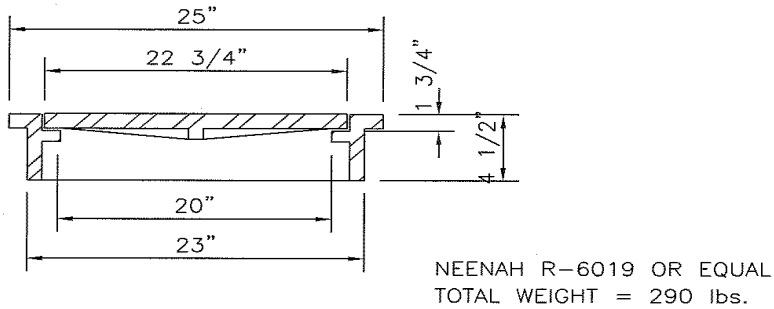

CITY OF REPUBLIC	RING AND COVER FOR CURB INLETS	FIGURE 02720-4

Figure 30: RING AND COVER FOR CURB INLETS FIGURE 02720-4

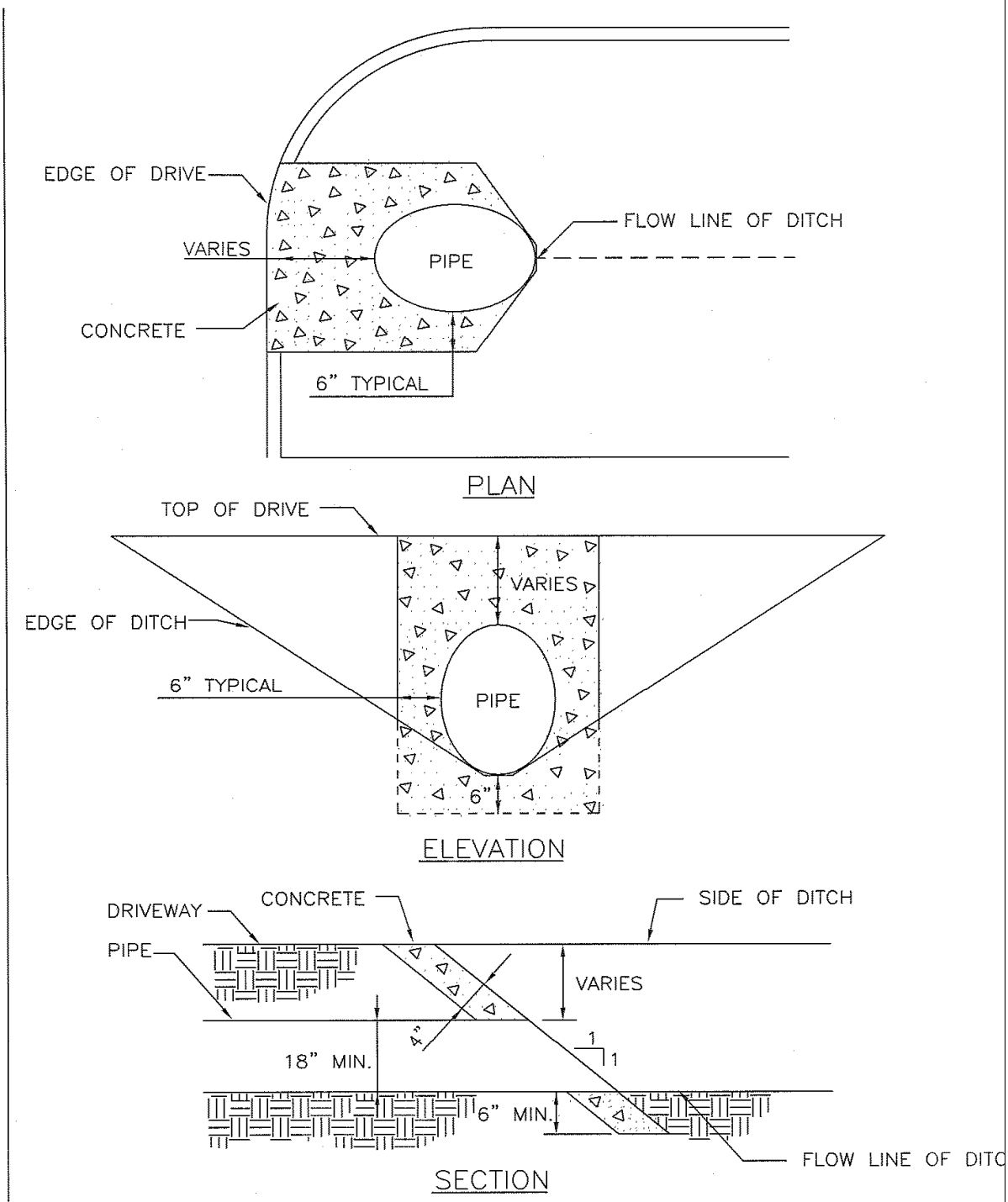

Figure 31: CONCRETE CULVERT CAP-DRIVEWAYS FIGURE 02720-5

SECTION 02831 - CHAIN-LINK FENCES AND GATES

PART 1 - GENERAL

1.01 SUMMARY:

A. This Section includes chain-link fabric fence, gates, and related components.

B. Related Work Specified Elsewhere:

1. Concrete: DIVISION 3.

1.02 REFERENCES:

A. Applicable Standards:

1. American Society for Testing and Materials (ASTM):

a. A123 - Zinc (Hot-Galvanized) Coatings on Products Fabricated From Rolled, Pressed, and Forged Steel Shapes, Plates, Bars, and Strip.

b. A153 - Zinc Coating (Hot-Dip) on Iron and Steel Hardware.

c. A392 - Zinc-Coated Steel Chain-Link Fence Fabric.

d. A491 - Aluminum-Coated Steel Chain-Link Fence Fabric.

e. A569 - Steel, Carbon (0.15 Maximum, Percent), Hot-Rolled Sheet and Strip, Commercial Quality.

f. B211 - Aluminum-Alloy Bar, Rod, and Wire.

g. B211 - Aluminum-Alloy Extruded Bar, Rod, Wire, Shape and Tube.

h. F668 - Polyvinylchloride (PVC)-Coated Steel Chain-Link Fence Fabric.

i. F669 - Strength Requirements of Metal Posts and Rails for Industrial Chain-Link Fence.

j. F1083 - Pipe, Steel, Hop Dipped, Zinc-Coated (Galvanized) Welded, for Fence Structures.

1.03 SUBMITTALS:

A. Submit as specified in DIVISION 1.

B. Includes, but not limited to, the following:

1. Product data: Manufacturer's technical data, specifications, and installation instructions for fence and gate posts, fabric, gates, and accessories.

2. Shop Drawings: Showing layout, location of fence, gates, posts, and including details illustrating fence height, sizes of posts, rails, braces, gates, hardware list, and accessories.

3. Mill certification that materials meet specifications of member size, strength, wall thickness, and coatings.

1.04 QUALITY ASSURANCE:

A. Provide chain-link fences and gates as complete units, including necessary erection accessories, fittings, and fastenings, from a single source or manufacturer.

PART 2 - PRODUCTS

2.01 ACCEPTABLE MANUFACTURERS:

A. Subject to compliance with requirements, provide products of one of the following:

1. Galvanized Steel Fencing and Fabric:

a. Allied Tube and Conduit Corp.

b. Anchor Fence, Inc.

c. Cycline Fence, USK Corp.

2.02 GENERAL:

A. Fence height and gate width(s) shall be as indicated.

B. Dimensions indicated for pipe, roll-formed, and H-sections are outside dimensions, exclusive of coatings.

2.03 FABRIC:

A. Steel Fabric:

1. No. 9 gauge, 2-inch diamond-mesh steel, chain-link fabric. Furnish 1-piece fabric widths for fencing up to 12'-0" high.

2. Galvanized: Conform to ASTM A392 with zinc coating, Class 2, 2.0 ounces minimum per square foot of wire surface.

3. Top and bottom selvage knuckled for fabric 5'-0" and under.

2.04 FRAMING AND ACCESSORIES:

A. Steel Framework:

1. General: Galvanized steel, ASTM F1083 or ASTM A123, with not less than 1.8-ounce zinc per square foot of surface, or steel conforming to ASTM A569 externally triple-coated with hot-dip galvanizing at 1.0 ounce/square foot, chromatic conversion coating and clear acrylic polyurethane and coated internally with zinc-rich coating.

2. Fittings and Accessories: Galvanized, ASTM A153, with zinc weights per Table I.

2.05 STEEL POSTS, TOP RAIL AND BRACES:

A. Minimum size and weight of steel components shall be as follows:

1. Posts for Fabric Height Over 6 Feet:

a. End, Angle, Corner, or Pull Posts: 2.875 inches o at 5.79 pounds per foot.

b. Line Posts - 6-Foot to 8-Foot Fabric Height: 2.375 inches od at 3.65 pounds per foot.

c. Line Posts - Over 8-Foot Fabric Height: 2.875 inches of pipe at 5.79 pounds per foot.

d. In lieu of pipe specified above, steel pipe conforming to ASTM A569 of greater strength but less wall thickness, will be acceptable.

2. Posts for Fabric Height 6 Feet or Less:

a. End, Angle, Corner, or Pull Posts: 2.375 inches od at 3.65 pounds per foot.

b. Line Posts: 1.90 inches od at 2.70 pounds per foot.

c. In lieu of pipe specified above, steel pipe conforming to ASTM A569 of greater strength but less wall thickness, will be acceptable.

3. Gate Posts:

a. Furnish posts for supporting single-gate leaf, or one leaf of a double-gate installation, for nominal gate widths as follows:

Leaf Width	Gate Post	lbs/lin. ft.
Up to 6'	3.5" x 3.5" roll-formed	4.85
	section or 2.875" od pipe	5.79
Over 6' to 13'	4.000" od pipe	9.11

4. Top Rail:

a. 1.660 inches od at 2.27 pounds per foot.

b. 18-foot minimum length of each section.

c. Expansion-type couplings for each joint, approximately 6 inches long.

5. Post Bracing:

a. Diagonal adjustable rods 3/8 inch in diameter equipped with adjustable tightener.

b. Horizontal Braces: 1.660 inches od at 2.27 pounds per foot.

6. Post Tops:

   a. Designed as a weather tight closure cap for tubular posts.

   b. Furnish caps with openings to permit passage of top rail.

   c. Malleable iron or pressed steel.

7. Stretcher Bars:

   a. One piece, full height of fabric.

   b. 3/16-inch x 3/4-inch, galvanized.

   c. Bands of galvanized steel or malleable iron.

8. Barbed Wire:

   a. Galvanized, ASTM A121, Class 2 or Aluminum coated.

   b. Two 12-1/2 gauge steel wire with 4 point barbs.

   c. Three strands of barbed wire located above top rail.

9. Bottom Tension Wire:

   a. Galvanized or aluminum coated coil spring wire, 7 gauge.

2.06 GATES:

A. Manual-Swing:

1. Framing:

   a. Fabricate perimeter frames of gates from metal and finish to match fence framework.

   b. Provide intermediate horizontal and vertical members for proper gate operation and for attachment of fabric, hardware, and accessories. Space so that frame members are not more than 8 feet apart unless otherwise indicated.

c. Frames assembled by welding or watertight galvanized steel rigid fittings.

d. Provide with same fabric as for fence. Install fabric with stretcher bars at vertical and top and bottom edges.

e. Diagonal cross bracing of 3/8-inch-diameter adjustable truss rods to ensure frame rigidity without sag or twist.

f. Where barbed wire is indicated or specified, extend gate end members 1 foot above top members to receive barbed wire.

2. Hardware:

a. Hinges of pressed or forged steel, or malleable iron, nonlift-off type, offset to permit 180° gate opening, 1-1/2 pair per leaf.

b. Latches and Gate Stops: Double-leaf.

(1) Plunger-bar type latch, full gate height, designed to engage gate stop of flush-plate type, with anchors.

(2) Locking device and padlock eyes an integral part of latch.

(3) Keeper to automatically engage gate leaf and secure free end of gate in open position.

c. Latches: Single-leaf.

(1) Forked type to permit operation from either side of gate.

(2) Padlock eye as integral part of latch.

3. Coating: Galvanize conforming to A153.

a. Sliding Cantilevered:

4. Framing:

   a. Inverted channel track, roller ball-bearing truck assemblies, guides, stays, bracing, hardware, and accessories as required.

   b. Intermediate horizontal and vertical members for proper gate operation and for attachment of fabric, hardware, and accessories. Space so that frame members are not more than 8 feet apart unless otherwise indicated.

   c. Frames assembled by welding or watertight galvanized steel rigid fittings.

   d. Diagonal cross bracing of 3/8-inch-diameter adjustable truss rods to provide frame rigidity.

   e. Where barbed wire is indicated or specified, extend gate end members 1 foot above top members to receive barbed wire.

2.07 CONCRETE: As specified in Section 03300.

PART 3 - EXECUTION

3.01 PREPARATION:

A. Grading: Perform final grading prior to installation of fence.

3.02 INSTALLATION:

A. Fence:

   1. Follow general contour of ground and properly alignment. Install as indicated.

   2. Posts:

      a. Set in concrete bases 3 feet below finish grade. Trowel-finish tops of footings and dome to direct water away from posts.

      b. Temporarily brace until concrete in bases has set.

      c. Install plumb and in straight alignment.

d. Space 10 feet center-to-center maximum.

e. Install pull posts every 300 feet if no corner posts are encountered in that distance.

f. Install corner posts at changes in direction of 30° or more.

g. Install pull posts at changes in direction of 10° to 30°.

h. Install pull posts at all abrupt changes in grade.

3. Post Bracing:

a. Install at each end, pull and gate post, and each side of each corner post.

b. Install after concrete in post bases has set.

c. Install so posts are plumb when diagonal rod is under tension.

4. Top Rails:

a. Run continuously through post caps or barbed wire supporting arms. (Bend to radius for curved runs.)

b. Install expansion couplings at each joint.

5. Fabric:

a. Run continuously through post caps or barbed wire supporting arms. (Bend to radius for curved runs.)

b. Install fabric on security side of fence and anchor to framework so that fabric remains in tension after pulling force is released.

c. Use U-shaped wire, conforming to diameter of pipe to which attached, clasping pipe and fabric firmly with ends twisted at least two full turns. Bend ends of wire to minimize hazard to persons or clothing.

d. Fasten fabric to steel posts with wire ties spaced 12 inches maximum.

e. Fasten fabric to top rail with wire ties spaced at 24 inches oc maximum.

6. Stretcher Bars:

a. Thread through or clamp to fabric 4 inches oc.

b. Secure to posts with metal bands spaced 15 inches oc maximum.

c. Install at each gate, pull and end post, and each side of corner post.

7. Post Tops: Install on each post.

8. Barbed Wire: Mount strands on 45 degree extension arms.

9. Bottom Tension Wire:

a. Install approximately 6 inches above grade.

b. Attach wire to each post and securely anchor to terminal gate posts.

B. Manual-Swing and Cantilevered Sliding Gates:

1. Install plumb and level.

2. Install all hardware, tracks, framing, supports, and appurtenances as required for gate type.

3. Install keepers, ground-set items, and flush plate in concrete for anchorage.

4. Adjust and lubricate as necessary for smooth operation.

C. Repairing Damaged Coatings:

1. Repair any damaged coatings in the shop or field by recoating with compatible and similar coating.

2. Apply per manufacturer's recommendations.

END OF SECTION 02831

SECTION 02930 – SEEDING AND SODDING

PART 1 - GENERAL

1.01 SUMMARY:

A. This Section includes the following areas of Work:

1. Preparation of areas for seeding and sodding.

2. Seeding.

3. Sodding.

4. Mulching.

5. Fertilizing seed and sod areas.

6. Maintenance.

B. Related Work Specified Elsewhere:

1. Site Preparation and Earthwork: SECTION 02200.

1.02 SUBMITTALS:

A. Certificates:

1. Seed and fertilizer shall be accompanied by certificate from vendors certifying they meet requirements of these Specifications, stating botanical name, percentage by weight, percentage of purity, germination, and weed seed for each grass seed species.

PART 2 - PRODUCTS

2.01 TOPSOIL: Specified in SECTION 02200.

2.02 GRASS SEED:

A. Provide fresh, clean, new crop seed complying with tolerance for purity and germination established by Official Seed Analysts of North America and as required below.

B. Be labeled according to the U.S. Department of Agriculture Federal Seed Act and shall be furnished in containers with tags showing seed mixture, purity, germination, weed content, name of seller, and date on which seed was tested:

1. Seed Mixture:

a. Meet the following minimum percentage requirements for purity and mix ratio:

Common and Botanical Name	Minimum Pure Live Seed (%)	Rate of Pure Live Seed (Pounds per Acre)
Alta Fescue or Kentucky 31 Fescue (Festuca Elatior, variation Arundinces)	75	100
Rye Grass (Lolium perenne or L. Multiflorum)	80	25
Kentucky Blue Grass (Pac Pratensis)	75	15
Creeping Red Fescue (Festura Ruera)	85	10
Total		150 pounds

2. Moldy seed or seed that has been damaged in storage shall not be used.

2.03 SOD:

A. Machine cut, strongly rooted, certified turf-grass sod, at least 2 years old, and be relatively free of weeds or other undesirable native grasses. Provide sod capable of vigorous growth and development when planted (viable, not dormant).

B. Be composed principally of the following:

1. Kentucky bluegrass.

C. Moisten sod to depth at which it is to be cut when stripped during dry periods.

D. Provide sod in uniform thickness of 5/8-inch, plus or minus 1/4-inch, measured at time of cutting and excluding top growth and thatch. Strips shall be of supplier's standard size of uniform length and width with maximum 5% allowable deviation in either length or width. Broken or torn pads, or pads with uneven ends are not acceptable.

E. Sod pads shall be capable of supporting their own weight and retaining size and shape when pad is suspended vertically from a firm grasp on upper 10% of pad.

F. Handle sod with care to prevent loss of native soil from roots.

2.04 LIMING MATERIAL:

A. Shall consist of agricultural liming materials conforming to the Missouri Agricultural Liming Materials Act of 1976.

B. Material used for soil neutralization, unless otherwise specified, shall be agricultural lime with not less than 90% passing the No. 8 sieve and containing not less than 65% calcium carbonate equivalent.

C. Manufacturer's certification shall include the minimum pounds of ENM (effective neutralizing material) per ton of the material to be supplied.

2.05 FERTILIZER:

A. Commercial fertilizer of neutral character, with some elements derived from organic sources, containing not less than 4% phosphoric acid, 2% potassium, and percentage of nitrogen required to provide not less than 1.0 lb. of actual nitrogen per 1,000 square feet of lawn area. Provide nitrogen in form that will be available to the lawn during initial period of growth.

B. Deliver to site in labeled bags or containers.

2.06 MULCH:

A. Vegetative Anti-erosion Mulch: Seed- free salt hay or threshed straw of wheat, rye, oats, barley, or other approved materials.

B. Wood Cellulose Fiber:

1. Not contain germination or growth-inhibiting ingredients.

2. Dyed an appropriate color to aid in visual inspection.

3. Be easily and evenly dispersed when agitated in water.

4. Supply in packages of not more than 100-pound gross weight, and be marked by the manufacturer to show the air dry weight content.

2.07 JUTE NETTING:

A. Uniform, open, plain weave mesh of smolder-resistant, unbleached single-jute yarn:

1. Yarn of loosely twisted construction and not vary in thickness by more than one-half its normal diameter.

B. Furnish in rolled strips and as follows:

1. Minimum width of 42 inches.

2. 5.5 wrap yarns by 3.5 filling yarns per inch.

C. Staples of No. 11 gauge or heavier steel wire, U-shaped and not less than 6 inches in length.

PART 3 - EXECUTION

3.01 SOIL PREPARATION:

A. Dispose of any growth, rocks, or other obstructions which might interfere with tilling, seeding, sodding, or later maintenance operations. Remove stones over 1-1/2 inches in any dimension and sticks, roots, rubbish, and other extraneous matter.

B. Thoroughly loosen and pulverize topsoil to a depth of at least 4 inches.

C. Grade planting areas to a smooth, even surface with loose, uniformly fine texture. Roll and rake, remove ridges and fill depressions to meet finish grades. Limit fine grading to areas which can be planted within immediate future.

D. Moisten prepared areas before planting if soil is dry. Water thoroughly and allow surface to dry off before planting. Do not create a muddy soil condition.

E. Restore prepared areas to specified condition if eroded or otherwise disturbed after fine grading and prior to planting.

F. Spread planting soil mixture to depth required to meet thickness, grades, and elevations indicated after light rolling and natural settlement.

G. Allow for sod thickness in areas to be sodded.

3.02 LIMING AND FERTILIZING:

A. Lime and fertilizer shall be applied separately, but may be incorporated into the soil in one operation.

B. Lime and fertilizer shall be applied not more than 48 hours before the seeding or sodding unless otherwise authorized by the Engineer.

C. Contractor shall take a minimum of three samples of the topsoil stockpile and through the services of an independent laboratory have test run to ascertain the rates of application of soil amendments required to provide at least the quantity of effective neutralizing material and fertilizers to nourish new growth.

D. Apply lime and fertilizer at the rates recommended by soil analysis in pounds per acre to prepared seedbeds and sod beds.

E. Incorporate fertilizer into the soil to a depth of at least 3 inches by discing, harrowing, or raking, except where applied hydraulically on slopes steeper than 2 horizontal to 1 vertical.

3.03 SEEDING:

A. Do not use wet seed or seed which is moldy or otherwise damaged in transit or storage.

B. Do not seed when wind velocity exceeds 5 miles per hour. Distribute seed evenly over entire area by sowing equal quantity in two directions at right angles to each other.

C. Sow not less than rate of 100 pounds per acre.

D. Rake seed lightly into top 1/8-inch of soil, roll lightly, and water with fine spray.

E. Seasonal Limitations:

1. Perform seeding only during the following seasons:

a. March 1 to June 15.

b. September 1 to October 30.

F. Methods of Application:

1. Dry Seeding: Spreader or seeding machine.

2. Hydroseeding: Mix seed, fertilizer and pulverized mulch with water and constantly agitate. Do not add seed to water more than 4 hours before application:

a. On slopes of 3 horizontal to 1 vertical or flatter, apply seed separately from fertilizer. Cover seed with soil to an average depth of 1/2-inch by raking or other approved methods.

b. On slopes steeper than 3 horizontal to 1 vertical, a Type 3 Mulch, meeting the content and application requirements specified in Section 802 of the Missouri Standard Specifications for Highway Construction is required.

3.04 MULCHING:

A. Apply a mulch covering to all seeded areas.

B. Apply vegetative mulch to loose depth of 1-1/2 inches by means of a mechanical spreader or other approved methods.

C. Apply wood-cellulose fiber mulch hydraulically at the rate of 1,000 pounds per acre:

1. Mulch and seed may be applied in a single operation.

2. Apply mulch to achieve a uniform coverage of the soil surface.

D. Immediately follow the application of the mulch, water the seeded area in one watering, in sufficient amount to penetrate the seedbed to a minimum of 2 inches. Perform so as not to cause erosion or damage to the seeded surface.

E. Protect seeded areas against hot, dry weather or drying winds by applying mulch not more than 24 hours after completion of seeding operations.

3.05 SODDING NEW LAWNS:

A. Do not place sod during a drought or during the period from June 15 to September 1, except as authorized by the Engineer.

B. Lay sod within 24 hours from time of stripping. Do not lay dormant sod or if ground is frozen.

C. Sod shall be moist at the time it is placed.

D. Lay sod strips along contour lines, by hand, commencing at the base of the area to be sodded and working upward:

1. Carefully lay sod to produce tight joints. Butt ends and sides of sod strips; do not overlap.

2. Stagger transverse joints of sod strips.

3. Work from boards to avoid damage to subgrade or sod.

4. Tamp or roll lightly to ensure contact with subgrade. Work sifted soil into minor cracks between pieces of sod, removing excess to avoid smothering adjacent grass.

E. On slopes of 3 horizontal to 1 vertical and steeper, anchor sod by wooden pegs. Pegs shall be 1/2" x 12", driven into the ground on about 2-foot centers. Top of peg after driving shall be not less than 1/2-inch but not more than 1 inch above top of sod.

F. Water sod with fine spray immediately after planting. During first week, water daily or more frequently as necessary to maintain moist soil to depth of 4 inches.

3.06 RECONDITIONING EXISTING GRASS AREAS:

A. Recondition existing grass areas damaged by Contractor's operations, including storage of materials or equipment and movement of vehicles. Also recondition the areas where settlement or washouts occur or where minor regrading is required. Recondition other existing grass areas where indicated.

B. Provide fertilizer, seed or sod, and soil amendments as specified for new grass and as required to provide satisfactorily reconditioned grass growth. Provide new planting soil as required to fill low spots and meet new finish grades.

C. Cultivate bare and compacted areas thoroughly to provide a good, deep planting bed.

D. Remove diseased or unsatisfactory grass areas; do not bury into soil. Remove topsoil containing foreign materials resulting from Contractor's operations including oil drippings, stone, gravel, and other construction materials. Replace with new topsoil.

E. Where substantial grass remains (but is thin), mow, rake, aerate if compacted, fill low spots, remove humps and cultivate soil, fertilize, and seed. Remove weeds before seeding or, if extensive, apply selective chemical weed killers as required. Apply a seedbed mulch, if required, to maintain moist condition.

F. Water newly planted areas and keep moist until new grass is established.

3.07 PROTECTION:

A. Erect barricades and warning signs as required to protect newly planted areas from traffic. Maintain barricades throughout maintenance period until lawn is established.

3.08 MAINTENANCE:

A. Mow grass to a height of 2 inches as soon as there is enough top growth to cut with mower. Remove no more than 40% of grass leaf growth in initial or subsequent mowings. Do not delay mowing until grass blades bend over and become matted.

B. Remove weeds by pulling or chemical treatment.

C. Perform maintenance until the date of final acceptance by City.

D. Seeded Areas:

1. Water as required by good practice and as necessary to obtain a flourishing cover.

2. Repair any portion of the seeded surface which becomes gullied or otherwise damaged, or the seeding becomes damaged or destroyed.

E. Sodded Areas:

1. Thoroughly water daily for a period of 15 days after placing.

2. Maintain sod in good live condition. Replace any sod not in good growing condition with fresh live sod.

3. Water thoroughly whenever sod evidences excessive drying.

F. Apply second fertilizer application after first mowing and when grass is dry. Use fertilizer which will provide not less than 1.0 pound of actual nitrogen per 1,000 square feet of lawn area.

3.09 ACCEPTANCE OF LAWNS:

A. When lawn Work is Substantially Complete, including maintenance, Engineer and City will, upon request, make an inspection to determine acceptability:

1. Lawn Work may be inspected for acceptance in parts agreeable to City, provided Work offered for inspection is complete, including maintenance.

B. Replant rejected Work and continue specified maintenance until re-inspected by Engineer and City and found to be acceptable.

C. Seeded lawns will be acceptable provided requirements, including maintenance, have been complied with and healthy, uniform, close stand of specified grass is established free of weeds, bare spots, and surface irregularities.

D. Sodded lawns will be acceptable provided requirements, including maintenance, have been complied with and healthy, well-rooted, even-colored, viable lawn is established free of weeds, open joints, bare areas, and surface irregularities.

3.10 CLEANUP: Promptly remove soil and debris created by lawn Work from paved areas. Clean wheels of vehicles prior to leaving site to avoid tracking soil onto surfacing of roads, walks, or other paved areas.

END OF SECTION 02930

SECTION 03200 – CONCRETE REINFORCEMENT

PART 1 - GENERAL

1.01 SUMMARY:

A. This Section includes steel reinforcement bars, ties, welded wire fabric, bolsters, chair supports, and accessories.

B. Related Work Specified Elsewhere:

1. Concrete: SECTION 03300.

1.02 REFERENCES:

A. Applicable Standards:

1. American Society for Testing and Materials (ASTM):

a. A82 - Steel Wire, Plain, for Concrete Reinforcement.

b. A185 - Steel Welded Wire, Fabric, Plain, for Concrete Reinforcement.

c. A615 - Deformed and Plain Billet-Steel Bars for Concrete Reinforcement.

2. American Concrete Institute (ACI):

a. 301 - Specifications for Structural Concrete for Buildings.

b. SP-66 - Detailing Manual.

c. 318 - Building Code Requirements for Reinforced Concrete.

3. American Welding Society (AWS):

a. A5.5 - Low Alloy Steel Covered Arc-Welding Electrodes.

b. B3.0 - Welding Procedures and Performance Qualification.

c. D1.4 - Structural Welding Code - Reinforcing Steel.

4. Concrete Reinforcing Steel Institute (CRSI):
   a. Manual of Standard Practice.

1.03 SUBMITTALS:

A. Submit as specified in DIVISION 1.

B. Include, but not limited to, the following:

1. Complete bar schedule, bar details, and erection drawings to conform to ACI SP-66.

2. Drawing with each type of bent bar marked with identification mark. Straight bars shall have mark number or be identified by size and length.

3. Erection drawings shall be clear, easily legible, and to a minimum scale of:

   a. 1/4 inch = 1 foot.

   b. 1/8 inch = 1 foot if bars in each face are shown in separate views.

4. Size and location of all openings.

5. Concrete protective cover.

6. Grade of steel.

7. Lap splice lengths.

1.04 DELIVERY, STORAGE, AND HANDLING:

A. Store steel reinforcement blocked-up off the ground and in orderly stacks.

B. Store only bars with the same identifying label in the same stack.

1.05 TESTING:

A. Perform at the mill for each heat.

C. Submit certified test results for acceptance upon request.

PART 2 - PRODUCTS

2.01 REINFORCEMENT BARS, TIES, AND STIRRUPS:

A. Materials:

1. Conform to ASTM A615, Grade 60, except as otherwise specified.

2. Cold-drawn wire for spiral column ties shall conform to ASTM A82.

B. Fabrication of Bars:

1. Fabricate with cold bends conforming to the recommended dimensions shown in ACI 318.

2. Fabricate bars according to the tolerances given in ACI 301, Chapter 5.

3. Field fabrication will be allowed only if Contractor has equipment to properly fabricate steel.

4. Attach metal or plastic tags with identifying mark or length corresponding to mark number or length on Drawing. Bent bars shall have mark number.

5. Contractor may, at his option, continue steel reinforcement through openings in walls and slabs, then field-cut the opening so that there will be the required concrete cover between ends of bars and edge of opening.

2.02 WELDED WIRE FABRIC:

A. Conform to ASTM A185 using bright basic wire conforming to ASTM A82.

B. Wire size W 1.4 and smaller shall be galvanized.

C. Mats only.

2.03 BOLSTERS, CHAIRS, AND ACCESSORIES:

A. Conform to ACI SP-66 and the CRSI Manual of Standard Practice.

B. Provide all spacers, bolsters, chairs, ties, and other devices necessary to properly space, place, support, and fasten steel reinforcement in place during the concrete placement.

C. Metal accessories shall be plastic-coated where legs will be exposed in finished concrete surfaces.

D. Do not use rocks, broken bricks, wood blocks, reinforcement driven into the ground, or concrete fragments for support of reinforcement.

2.04 PRECAST CONCRETE BLOCK BAR SUPPORTS:

A. May be used only for bar supports in slabs on ground.

B. Blocks shall be made with a minimum of nine sacks of cement per cubic yard and have a minimum compressive strength of 6,000 psi in 28 days.

C. Each block shall have a minimum of 9 square inches of bearing area. Space as required by the particular condition of weight, bearing surface, and rigidity of the steel reinforcement.

PART 3 - EXECUTION

3.01 PLACEMENT OF CONCRETE REINFORCEMENT:

A. Place in accordance with Chapter 5 of ACI 301, Chapters 7 and 12 of ACI 318, and the CRSI Manual of Standard Practice.

B. Tie securely with 16-gauge or larger annealed iron wire.

C. Place to maintain concrete cover to conform to Chapter 5 of SCI 301 and Chapter 7 of ACI 318, unless otherwise indicated.

D. All protruding reinforcement, onto which construction personnel could fall, shall be guarded to eliminate the hazard of impalement.

E. Splice steel to conform to Chapter 12 of ACI 318.

1. Unless otherwise indicated, lap splices shall be Class B as defined by ACI 318.

F. Lap welded wire fabric in accordance with Section 12.19 of ACI 318, but not less than the length of one mesh plus 2 inches.

G. Connection of reinforcement bars to steel shapes or plate shall be with a Cadweld Series B-splice.

END OF SECTION 03200

SECTION 03300 – CONCRETE

PART 1 - GENERAL

1.01 SUMMARY:

A. This Section includes concrete and related items.

B. Related Work Specified Elsewhere:

1. Concrete Reinforcement: SECTION 03200.

1.02 REFERENCES:

A. Comply with the provisions of the following codes, specifications, and standards, except as otherwise indicated.

1. American Concrete Institute (ACI):

a. 302 - Guide for Concrete Floor and Slab Construction.

B. Applicable Standards Where Referenced Herein:

1. American Society for Testing and Materials (ASTM):

a. C31 - Making and Curing Concrete Test Specimens in the Field.

b. C33 - Concrete Aggregates.

c. C39 - Compressive Strength of Cylindrical Concrete Specimens.

d. C40 - Organic Impurities in Fine Aggregates for Concrete.

e. C88 - Soundness of Aggregates by Use of Sodium Sulfate or Magnesium Sulfate.

f. C96 - Ready-Mixed Concrete.

g. C117 - Materials Finer than No. 200 Sieve in Mineral Aggregates by Washing.

h. C136 - Method for Sieve Analysis of Fine and Coarse Aggregates.

i. C142 - Clay Lumps and Friable Particles in Aggregates.

j. C143 - Slump of Portland Cement Concrete.

k. C150 - Portland Cement.

l. C172 - Sampling Freshly Mixed Concrete.

m. C192 - Making and Curing Concrete Test Specimens in the Laboratory.

n. C231 - Test Method for Air Content of Freshly Mixed Concrete by the Pressure Method.

o. C260 - Air-Entraining Admixtures for Concrete.

p. C289 - Potential Reactivity of Aggregates (Chemical Method).

q. C295 - Petrographic Examination of Aggregates for Concrete.

r. C309 - Liquid Membrane-Forming Compounds for Curing Concrete.

s. C494 - Chemical Admixtures for Concrete.

t. C566 - Total Moisture Content of Aggregate by Drying.

u. D1751 - Preformed Expansion Joint Fillers for Concrete Paving and Structural Construction. (Non-extruding and Resilient Bituminous Types).

v. D1752 - Preformed Sponge Rubber and Cork Expansion Joint Fillers for Concrete Paving and Structural Construction.

2. American Concrete Institute (ACI):

a. 211.1 - Recommended Practice for Selecting Proportions for Normal and Heavyweight Concrete.

b. 304 - Recommended Practice for Measuring, Mixing, Transporting, and Placing Concrete.

c. 305 - Committee Report on Hot-Weather Concreting.

d. 306 - Committee Report on Cold-Weather Concreting.

e. 308 - Recommended Practice for Curing Concrete.

f. 309 - Recommended Practice for Consolidation of Concrete.

3. Concrete Plant Mixer Standards of the Plant Mixer Manufacturers Bureau.

4. Concrete Plant Standards of the Concrete Plant Manufacturers Bureau.

5. Corps of Engineers Specification for Non-shrink Grout, CRD-C621.

6. National Bureau of Standards (NBS) Specifications for Scales.

7. National Ready-Mix Concrete Association, "Truck Mixer, and Agitator Standards of the Truck Mixer Manufacturers Bureau."

1.03 SUBMITTALS:

A. Submit as specified in DIVISION 1.

B. Include, but not limited to, product data and Shop Drawings of the following:

1. Non-shrink grouts.

2. Admixtures.

3. Bonding agents.

4. Curing agents.

5. Expansion joint materials.

6. Expansion joint sealants.

7. Waterstops.

C. Mill Certificates:

1. Submit a minimum of one copy for each cement shipment.

D. Concrete Mix Design Proportions:

1. Submit as specified in PART 2 - Mix Proportions, this Section.

2. Submit for each mix design.

3. Resubmit for any change in each mix design.

E. Production Test Reports: Submit as specified in DIVISION 1.

1.04 QUALITY ASSURANCE:

A. Field Testing:

1. Tests of concrete shall be performed by an ACI concrete Field Testing Technician Grade 1.

2. Submit two certified copies of the qualification records as evidence of qualification prior to placing concrete.

B. Finishing:

1. Finishing of concrete shall be supervised by an ACI Concrete Flatwork Technician/Finisher.

2. Submit two certified copies of qualification records as evidence of qualification prior to placing concrete.

PART 2 - PRODUCTS

2.01 CONCRETE

A. Materials:

1. Portland cement Type II. Type II shall conform to ASTM C150 except the tricalcium aluminate content shall not exceed 5%.

2. Fine Aggregate:

   a. Conform to ASTM C33.

   b. Approved service record of 3 years with a history indicating that the fine aggregate is not chemically reactive.

   c. For a new fine aggregate source, or when 3 years' approved service records are not available, or when the service records are unacceptable; the aggregate shall be evaluated for potential reactivity. Aggregate must be considered innocuous in accordance with petrographic examination by ASTM C295 and tests conforming to ASTM C289.

   d. Fine aggregate considered deleterious or potentially deleterious shall not be used without approval.

   e. Maintain fine aggregate free of ice and frozen lumps.

3. Coarse Aggregate:

   a. Conform to ASTM C33.

      (1) Limits for deleterious substances and physical property requirements shall conform to Table 3 and applicable class designation 5S, 5M, or 1N.

   b. Approved service record of 3 years with a history indicating that the coarse aggregate is not chemically reactive.

   c. For a new coarse aggregate source, when 3 years' approved service records are not available, or when the service records are unacceptable; the aggregate shall be evaluated for potential reactivity. Aggregate must be considered innocuous in accordance with petrographic examination by ASTM C289.

d. Coarse aggregate considered deleterious or potentially deleterious shall not be used without approval.

e. Blast furnace slag will not be permitted.

f. Maintain coarse aggregate free of ice and frozen lumps.

g. Grading Requirements:

(1) From 1 inch to No. 4 for all concrete unless otherwise specified.

4. Mixing Water:

a. Only potable water will be acceptable without testing. Expense of testing water shall be paid by Contractor.

b. Nonpotable water may be used if it produces concrete with at least 95% of the strength of similar specimens of the same mix design made with potable water, subject to approval of qualitative analysis.

5. Admixtures:

a. Water-Reducing Type:

(1) Conform to ASTM C494, Type A.

(2) Conform to manufacturer's recommendations for use.

(3) Technical assistance of the manufacturer's field representative shall be furnished upon request.

b. Air-Entraining Type:

(1) Conform to ASTM C260.

(2) Conform to manufacturer’s recommendations for use.

(3) Technical assistance of the manufacturer's field representative shall be furnished upon request.

(4) Testing of air-entraining admixtures shall conform to ASTM C233.

c. Other Admixtures: Used only with Engineer's written concurrence.

(1) Water-Reducing, Retarding Type: Conform to ASTM C494, Type D, and shall not contain any chloride ions added during manufacture.

d. Storage:

(1) Admixtures shall be stored in such a manner as to avoid contamination, evaporation, freezing, temperature changes, settling, or any damage which would adversely affect their characteristics.

B. Laboratory Testing of Materials for Use in Concrete:

1. An approved independent testing laboratory shall be selected and paid by Contractor to perform all required laboratory tests of materials proposed for use in the production of concrete and to determine mix proportions when laboratory trial batches are required.

2. Contractor shall deliver representative Samples of all proposed concrete materials to the laboratory for the following testing:

a. Fine Aggregate:

(1) ASTM C33.

(2) ASTM C40.

(3) ASTM C88.

b. Coarse Aggregate:

(1) ASTM C33.

(2) ASTM C88.

c. Mixing water, if other than potable water is proposed for use and in the opinion of Engineer there is reason to suspect its acceptability:

(1) With the design mix the laboratory shall make two concrete test cylinders using proposed water and two concrete test cylinders using potable water conforming to ASTM C192.

(2) All cylinders shall be tested conforming to ASTM C39. Age of cylinders at test shall be 28 days unless an earlier age is authorized by Engineer.

3. The laboratory test results shall be part of the design mix as specified in this PART 2 - Mix Proportions, this Section.

C. Concrete Qualities Required:

1. Compressive Strength:

a. Minimum 28-day compressive strength = 4,000 psi for all construction unless otherwise indicated or specified.

b. Minimum 28-day compressive strength = 3,000 psi for fill concrete and seal coats.

c. Compressive strength determinations shall be made from 6" diameter x 12" long concrete cylinders tested in accordance with ASTM C39.

2. Slump of concrete shall be 3 inches, ±1 inch as tested in accordance with ASTM C143.

3. Air Content: 5% to 7% as tested in accordance with ASTM C231.

4. Minimum Cement Content: 564 pounds per cubic yard of concrete.

5. Water-Cement Ratio:

   a. In addition to the aforementioned requirements, the water-cement ratio shall not exceed 0.45.

D. Mix Proportions:

1. Concrete shall be proportioned to conform to ACI 211.1.

2. Mix proportions for all concrete, unless otherwise specified, shall be selected preferably on the basis of field experience; but in the case where sufficient or suitable strength test data is not available, concrete shall be proportioned on the basis of laboratory trial mix design.

E. Measurement of Materials:

1. General Requirements:

   a. Conform to ACI 304.

   b. Beam or springless dial-type scale conforming with NBS - "Specifications for Scales".

   c. Volumetric measurement of water shall be performed with an approved automatic valve.

2. Concrete Plant Scale Accuracy and Calibration Frequency:

   a. The concrete plant scales shall be accurate to +0.4% of the capacity of the scale.

   B. The scales shall be calibrated at intervals as specified in PART 3 - Testing, this Section.

3. Individual Batch Accuracy:

   a. Cement: ±1.0%.

   b. Water: ±1.0% by volume or weight.

   c. Aggregates: ±2.0%.

   d. Admixtures: ±3.0% by volume or weight.

F. Mixing and Delivery:

1. Conform to ACI 304.

2. Cement temperature, when added to mix, shall not exceed 170°F.

3. Adjust the amount of mix water to compensate for the moisture content of the aggregates.

4. Concrete Plant:

   a. Conform to "Concrete Plant Mixer Standards of the Plant Mixer Manufacturers Division Concrete Plant Manufacturers Bureau" and "Concrete Plant Standards of the Concrete Plant Manufacturers Bureau".

   b. Charge with 5% to 10% of the mixing water both in advance and after the addition of aggregates and cement.

   c. Charge with remaining water uniformly with the other materials.

   d. Avoid charging in excess of manufacturer's rating.

   e. Discharge mixed concrete completely prior to recharging.

   g. Mixing Time:

      (1) Start immediately when all ingredients, except the last of the water, are in the mixer.

(2) Minimum mixing time shall conform with mixer manufacturer's instructions, but not be less than the following:

Capacity of Mixer Cubic Yards	Minimum Time of Mixing
1 or less	1 minute
2	1 minute, 15 seconds
3	1 minute, 30 seconds
4	1 minute, 45 seconds
5	2 minutes
6	2 minutes, 15 seconds

Add 15 seconds' mixing time for each additional cubic yard of concrete

5. Mixing of Concrete at Plant Off Jobsite:

a. Mix concrete in central mixer or truck mixer. Transport in truck mixer turning at agitation speeds only.

b. Water added to concrete having a slump below the specified minimum shall be at Contractor's risk. If the water added produces a slump greater than the specified maximum, the concrete will be rejected. If water is added, the concrete shall be remixed for a minimum of 25 revolutions.

c. Water shall not be added after the truck has begun to discharge.

d. Truck mixer shall conform to "Truck Mixer and Agitator Standards of the Truck Mixer Manufacturers Bureau" of the National Ready-Mix Concrete Association.

e. Ready-mixed concrete shall be produced and delivered conforming to ASTM C94 as applicable.

f. Contractor shall furnish Engineer with a concrete delivery ticket for each load of concrete. The ticket shall have the following information recorded:

(1) Name of ready-mixed concrete batch plant.

(2) Serial number of ticket.

(3) Date and truck number.

(4) Name of contractor.

(5) Specific designation of the job (name and location).

(6) Mix number.

(7) Amount of concrete delivered (cu yd).

(8) Time mixer was loaded.

(9) Time of arrival at site.

(10) Time discharge started.

(11) Time completed delivery.

(12) Amount of water added by Contractor and his initials.

(13) Signature of ready-mix concrete representative.

(14) Type, name and volume of admixture.

(15) Type and brand of cement.

(16) Maximum size of aggregate.

(17) Free water on the aggregate.

(18) Indication that all materials are as previously certified or approved.

(19) The delivery ticket shall be supplemented by a computerized printout for each batch (from an automatic printing unit incorporated in the batching system) containing actual weights of all materials delivered including cement, water, and coarse and fine aggregate.

6. Plant and truck mixer uniformity shall be tested according to ASTM C94. Frequency of tests shall be as specified in PART 3, this Section.

2.02 GROUT:

A. Grout for Dry Packing:

1. Volume: 1 part portland cement to 2 parts sand.

2. Keep water to a minimum as required for placing by the dry packing method.

3. Place after the mixed grout has been allowed to stand for 2 hours.

4. The sand and cement shall be as specified for concrete.

B. Flowable Non-shrinking Grout:

1. Use unless otherwise indicated or specified.

2. Required for setting equipment recommended by the manufacturer to be set with non-shrinking grout and in other places indicated.

3. Grout shall conform to Corps of Engineers specification for Non-shrink Grout, CRD-C621.

4. Grout shall be nonmetallic, as manufactured by one of the following:

a. L and M Construction Chemicals, Inc. - Crystex.

b. U. S. Grout Corporation - Five Star Grout.

c. Master Builder's Company - Masterflow 713 Grout.

d. Sauereisen Cements Company - Sauereisen F-100.

e. Cormix Construction Chemicals - Supreme Grout.

5. Prepare and place conforming to manufacturer's printed instructions.

6. For equipment bases, the concrete surfaces shall be sandblasted or roughened with a chipping hammer prior to grouting. The foundation plates shall be cleaned of any grease, oil, paint, primers, or epoxy coatings.

C. Grout for Bonding:

1. Proportion (by weight): 1 part cement to 1-1/2 parts sand.

2. Keep water to a minimum.

2.03 BONDING AGENT:

A. Provide moisture-insensitive, epoxy-resin bonding agent as manufactured by one of the following:

1. A. C. Horn, Inc. - Epoxtite.

2. Euclid Chemical Company - Euco Epoxy.

3. Sika Chemical Company - Sikadur 32, Hi-Mod.

4. L&M Construction Chemicals, Inc. - Epobond.

2.04 CONCRETE ACCESSORIES:

A. Waterstops:

1. Serrated virgin polyvinyl chloride equal to one of the following:

a. Tamma Industries - Horn/Durajoint Type 3.

b. Vulcan Metal Products Company - Vulco 8013.

2. Plastic Waterstop: Preformed plastic waterstop as manufactured by SYNKO-FLEX Products Co., Houston, Texas.

B. Expansion Joints:

1. Expansion Joint Filler: Premolded cork of thickness indicated and conforming to ASTM D1752, Type III, self-expanding cork. Use at all locations unless indicated to be asphalt-impregnated fiber.

2. Expansion Joint Filler: Preformed asphalt-impregnated fiber of thickness indicated and conforming to ASTM D1751.

3. Bond Breaker: Polyethylene tape or other plastic tape as recommended by the sealant manufacturer for preventing sealant from adhering to joint filler materials or joint surfaces at the bottom of joint where such adhesion would result in sealant failure.

4. Sealant Backer Rod (closed cell, compatible with sealant):

   a. Bostick Construction Products Division.

   b. Chem-Calk - Backer Rod.

   c. Dow Chemical Company - Ethafoam.

   d. Hercules Foam Backer Rod.

   e. Sonneborn Building Products - Sonofoam.

   f. W. R. Meadows - Sealtight Backer Rod.

5. Joint Sealant:

   a. Two-component polysulfide system as manufactured by one of the following:

      (1) A. C. Horn, Inc. - Hornflex L.

      (2) Pecora, Inc. - Synthacalk GC-2.

2.05 CURING AGENT:

A. Liquid membrane-forming compound conforming to ASTM C309, Type 1. Curing agent shall be VOC compliant with a maximum of 3.5 lbs/gal (425 g/l) or less where area regulations are more stringent. ASTM C309, Type 2 shall be used as specified in PART 3 - Hot Weather Concreting, this Section.

3.01 PREPARATION FOR CONCRETE PLACEMENT:

A. Openings Through Concrete: Provide openings through concrete as indicated and for the proper installation of all equipment, piping, wiring, ductwork and similar items installed included in the Work.

B. Installation of Embedded Items:

1. Provide for accurate installation of embedded items included in the Work.

2. During cold weather, protect embedded items from moisture which may freeze, expand, and crack the concrete structure.

3. Grease or tape anchor bolt threads to protect from concrete splatter.

C. Installation of Joints:

1. Construction Joints:

a. Location:

(1) Obtain Engineer’s approval of joints located by Contractor prior to preparation of reinforcing steel shop drawings.

b. Preparation and Installation:

(1) Clean and break laitance or other foreign material from bonding surface.

(2) Tighten forms remaining in place (where applicable) to prevent seepage between forms and hardened concrete.

(3) Provide waterstops and shear keys as indicated or specified and as required in any new construction joint requested by Contractor.

c. Waterstops:

(1) Install conforming to manufacturer's standard installation instructions.

(2) All joints and splices of PVC waterstop shall be 100% fused.

2. Expansion Joints:

a. Install filler, backer rod and sealant in strict conformance with manufacturer's written instructions.

b. Reinforcing steel shall not extend through expansion joints unless indicated otherwise.

c. Attach rigid joint filler to the face of the joint prior to placing adjacent concrete. The filler shall occupy the entire width of the joint.

d. Install sealant backer rod for sealant except where indicated to be omitted. Install bond breaker where indicated.

e. Clean joint surfaces immediately before application of sealant.

f. Install joint sealants to conform to ASTM C962. Tool sealant to provide smooth, uniform bead with a slightly concave surface, eliminate air pockets, and insure sealant contact and adhesion with sides of joint.

g. Protect joints from moisture and ice during freezing.

3. Contraction Joints: As specified in this PART 3 - Finishing, this Section.

3.02 PLACING OF CONCRETE:

A. Conventional Placing:

1. General Requirements:

a. Conform to ACI 304.

b. Bonding surfaces, including reinforcement, shall be clean, free of laitance and foreign materials.

c. Face horizontal bonding surfaces with 1-inch-thick coat of fresh "grout for bonding". Wet all other surfaces.

d. Place concrete on properly prepared and unfrozen subgrade and only in dewatered excavation and forms.

e. Use forms for all concrete except where otherwise indicated or specified.

f. Do not place concrete that has partially hardened or has been contaminated by foreign materials.

g. Prevent mud or foreign materials from entering the concrete or forms during placement operations.

2. Conveying:

a. Convey concrete from the mixer and deposit in place by methods which will prevent the segregation or loss of materials.

b. Equipment for chuting, pumping, and pneumatically conveying concrete shall be of such size and design as to provide a practically continuous flow of concrete at the delivery end.

c. Aluminum conveying equipment shall not be used.

3. Depositing:

a. Place concrete in continuous horizontal lifts not to exceed 2 feet, and place concrete against bulkheads and keyways at vertical joints.

b. Maximum free drop of concrete and grout for bonding shall be 5 feet, in walls 10 inches or less in thickness, with 1-foot additional drop allowed for each inch of wall thickness over 10 inches, with a maximum drop of 10 feet.

c. When moisture barrier is used, keep lapped joints closed and take precautions to avoid puncturing the barrier.

4. Consolidation of Concrete:

a. Consolidate concrete in conformance with ACI 309. Characteristics and application of concrete vibrators shall be as set forth in Table 5.1.4.

b. Provide an adequate number of vibrators of sufficient capacity to keep up with the maximum rate of concrete placement. Keep on hand adequate standby equipment in good operating condition.

c. Vibrate concrete only until the concrete is thoroughly consolidated and the voids filled, as evidenced by the leveled appearance of the concrete at the exposed surface and the embedment of the surface aggregate.

d. Insert internal vibrators vertically to the full depth of the layer being placed and into the previous layer. Do not drag vibrators through the concrete. Insert and withdraw vibrator slowly with the vibrator running continuously so that no hole will be left in the concrete. Do not flow concrete from one location to another by use of a vibrator.

e. Consolidate concrete layer to full depth when using a surface vibrator. Use thinner layers or a more powerful vibrator if necessary to achieve complete consolidation.

f. Use form vibrators only where sections are too thin or where sections are inaccessible for internal vibrators.

5. Time Requirements:

a. Place concrete at a sufficient rate to assure that lifts below have not taken initial set before fresh concrete is deposited.

b. Place concrete within 45 minutes after mixing. This period may be extended to 1 hour and 30 minutes provided that the combined air temperature, relative humidity, and wind velocity are such that the plasticity of the fresh concrete is satisfactory for placement and consolidation, and that the specified mixing water is not exceeded. Concrete which has partially set shall not be re-tempered but shall be discarded.

6. Placing Concrete at Joints:

a. Bed horizontal joints with 1 inch of grout for bonding.

b. Take precautions to ensure tight, well-bonded construction joints with no air pockets or voids.

c. Take special precautions to avoid bending or displacing waterstop while placing concrete around it.

d. Delay construction at a joint a minimum of 16 hours where placement is continued past joint, except where otherwise indicated.

3.03 FINISHING:

A. Unformed Surfaces:

1. Screed Finish:

a. Use as first stage for all concrete finishes.

b. Use as final finish on surfaces that will be covered by additional concrete, grout placement, or mortar setting bed except as otherwise specified.

c. Immediately after screeding, use a wood float, darby, or bullfloat to eliminate high and low spots and to embed large aggregate. This shall be done in a manner to produce even, uniform surfaces so that surface irregularities do not exceed 3/8 inch in 10 feet when used as final finish.

2. Floated Finish:

a. Use as second stage of broomed, troweled, or magnesium-troweled finish.

b. Float with mechanical float. Hand floating will be permitted only in areas inaccessible to mechanical float.

c. On surfaces not to receive troweled or magnesium-troweled finish, finish with wood or cork float after mechanical floating to a true uniform surface so that surface irregularities do not exceed 1/8 inch in 10 feet, except at floor drains.

3. Broomed Finish:

a. Use as final finish on all outdoor slabs including pavements and sidewalks.

b. After floated finish, draw a stiff bristle broom across the surface making uniform corrugations, perpendicular to the direction of traffic, not more than 1/16 inch deep.

4. Troweled Finish:

a. Use as final finish on all other unformed surfaces not otherwise indicated or specified.

b. Trowel with steel trowel, mechanical or hand, to obtain a smooth, dense finish. The final troweling shall be done after the concrete has become hard enough so that no mortar adheres to the edge of trowel and a ringing sound is produced as the trowel passes over the surface.

c. Do not trowel before surface water has evaporated or has been removed with a squeegee.

d. Finish to a true uniform surface so that surface irregularities do not exceed 1/8 inch in 10 feet, except at floor drains.

e. Do not add sand or cement to the floor surface.

5. Magnesium-Troweled Finish:

a. Perform as specified in PART 3 - Troweled Finish, this Section, except use a magnesium trowel by hand instead of a steel trowel to obtain a dense, but not slick, finish.

b. Use where floor will receive protective coating after curing.

6. Contraction Joints:

a. Locate as indicated.

b. Maintain true alignment with straightedge.

c. Joints shall be grooved except where sawed joints or preformed joints are indicated.

d. Grooved Joints:

(1) Perform during the finishing process.

(2) Width of groove shall not exceed 1/4 inch.

(3) Depth of groove shall be at least 1 inch.

e. Sawed Joints:

(1) Cut joints with power blade as soon as concrete surface is firm enough to resist tearing or damage by the blade and before random shrinkage cracks can occur. (Usually required 4 to 12 hours after finishing.)

(2) Make joints approximately 1/8 inch wide with depth as indicated.

(3) Seal with the same type sealant specified for expansion joint sealant.

B. Formed Surfaces:

1. Repair surface defects as specified in PART 3 - Repair of Defective Surfaces, this Section.

C. Repair of Defective Surfaces:

1. Defined as any concrete surface showing misalignment, rock pockets, poor joints, holes from ties, voids, honeycomb, or any other defective area.

2. Repairing:

   a. Repair as soon as forms have been removed.

   b. Chip surface back to minimum depth of 1/2 inch, chip edges perpendicular to surface, pre-wet depression and brush with neat cement immediately before patching.

   c. Patch surfaces using stiff mortar with same sand-cement radio as original concrete and with minimum water for placing. Blend with white cement to match concrete color.

   d. Compact mortar into depressions so that after curing, hole is filled and mortar is flush with surface. Use hammer and ramming rod for compacting the holes.

   e. Moist-cure for 3 days or use curing compound.

   f. Engineer shall be notified of areas containing defects or where reinforcing steel is exposed, prior to determination of repair method.

3.04 CURING:

A. Cure all concrete by one of the following methods in accordance with ACI 308:

1. Leaving in forms for a minimum of 7 days. Keep formwork wet to prevent drying of concrete surfaces.

2. Use of saturated bats, soaker hoses, or sprinkler for a minimum of 7 days. Keep concrete continuously wet.

3. Using one coat of a liquid membrane forming compound conforming to ASTM C309, Type 1. Apply immediately after removal of forms (which have been continuously wet); or in case of a slab, after the concrete has been finished and is hardened sufficiently to walk on.

4. Using polyethylene sheets applied in full contact with surfaces.

5. Curing of concrete during hot or cold weather shall conform to PART 3 - Hot Weather Concreting and Cold Weather Concreting, this Section.

3.05 HOT WEATHER CONCRETING:

A. Follow the recommendations of ACI 305 if any of the following conditions occur:

1. When the temperature is 90°F or above.

2. When the temperature is likely to rise above 90°F within the 24-hour period after concrete placement.

3. When there is any combination of high air temperature, low relative humidity, and wind velocity which would impair either concrete strength or quality.

B. Concrete shall have a maximum temperature of 85°F during placement.

C. Dampen subgrade and forms with cool water immediately prior to placement of concrete.

D. Protect freshly placed concrete immediately after placement so that the rate of evaporation as determined by ACI 305 (Figure 2.1.5) does not exceed 0.2 pound per square foot per hour.

E. Protect concrete with suitable insulation if rapidly decreasing nighttime temperatures occur, which would cause thermal shock to concrete placed during warm daytime temperatures.

F. Protect the concrete with temporary wet covering during any appreciable delay between placement and finishing.

G. Begin curing unformed surfaces immediately after finishing and continue for 24 hours. Curing shall consist of application and maintenance of water-saturated material to all exposed surfaces; horizontal, vertical, and otherwise. After the 24-hour interval, continue curing using one of the following methods:

1. Moist curing for 6 days.

2. Application of one coat of curing compound conforming to ASTM C309, Type 2.

3. Application and maintenance of curing paper or heat-reflecting plastic sheets for 6 more days.

H. Begin curing formed concrete immediately after placing. Curing shall consist of keeping forms continuously wet for 24 hours. Thereafter, continue curing using one of the following methods:

1. Loosen forms and position soaker hose so that water runs down along concrete surfaces. Continue for 6 days.

2. Strip forms and apply curing compound conforming to ASTM C309, Type 2. Do not allow concrete surfaces to dry prior to application of curing compound.

3.06 COLD WEATHER CONCRETING:

A. When the temperature is 40°F or is likely to fall below 40°F during the 24-hour period after concrete placement, follow the recommendations of ACI 306 to prevent loss of concrete strength or quality.

B. Minimum temperature for concrete as mixed shall be as indicated on lines 2, 3, and 4 of Table 1.4.1 of ACI 306. Maximum temperature for concrete as mixed shall be 10°F greater than the corresponding minimum temperature.

C. Place and maintain concrete so that its temperature is never less than the temperature indicated on line 1 of Table 1.4.1 of ACI 306. Maintain the required temperature for the time duration indicated on Table 1.4.2 of ACI 306.

D. Monitor temperature of concrete in place at corners or edges of formwork as applicable.

E. Air Heaters:

1. Do not expose concrete to carbon monoxide or carbon dioxide fumes from heaters or engines.

2. Oil- or coke-burning salamanders will not be permitted.

3. Heaters shall be ultramatic portable heaters made by the Union Chill Mat Company or Engineer approved equal.

4. Personnel shall be present at all times to maintain safe, continuous operation of heating system.

F. Control temperature and humidity of protected concrete so that excessive drying of concrete surfaces does not occur.

G. Calcium chloride will not be permitted as a concrete accelerator or to thaw frozen subgrade prior to concrete placement.

H. The maximum allowable temperature drop during the first 24-hour period after protection is discontinued shall be as indicated on line 5 of Table 1.4.1 of ACI 306.

I. Cure the concrete in accordance with Chapter 5 of ACI 306.

3.07 LOW-STRENGTH CONCRETE:

A. Low-Strength Concrete:

1. Defined as either:

a. Concrete whose average, of any sets of three consecutive 28-day strength tests, is below the required 28-day strength.

b. Concrete whose individual 28-day strength test (average of two cylinders) is more than 500 psi below the required 28-day strength.

2. Should concrete meet either definition of low-strength concrete as a minimum, the Contractor shall take the following steps:

   a. Increase the cement content. The increase shall be based on a statistical evaluation of the strength data, the design water-cement ratio, compressive-strength curve, and acceptable mix-design literature as follows:

      (1) If sufficient concrete has been furnished to accumulate 30 tests, these should be used to establish a new target average strength in accordance with ACI 318, Section 4.3.1.

      (2) If less than 30 tests have been made, the new target average strength should be at least as great as a the average strength used in the initial selection of the mix proportions. Increase the target average strength based on a statistical evaluation of the available strength data, the design water-cement ratio, compressive-strength curve, and acceptable mix-design literature. If the statistical average equals or exceeds the initial mix-design level, a further increase in the average level is required.

   b. Remove and replace with acceptable concrete when the quality and location of the concrete is such that the Engineer considers the strength or durability of the structure is impaired and so orders.

B. Potentially Low-Strength Concrete: Defined as concrete whose 7-day test (average of two cylinders) is less than 70% of the specified minimum 28-day compressive strength.

3.08 MISCELLANEOUS CONCRETE ITEMS:

A. Concrete Seal Coat:

1. Apply to the ground surface immediately beneath all "on-grade" slabs and footings where indicated or specified.

2. Seal coat shall consist of a concrete slab of the thickness indicated but not less than 2 inches.

3. Accurately screed so that the top of the seal coat will not be higher than the bottom elevation of structural slabs or footings to be placed thereon.

4. Do not place seal coat until after all excavating in the area have been completed and all drain lines, conduits, and other items under the area are completed and properly backfilled and compacted.

B. Equipment Bases:

1. Construct equipment bases, pads, and foundations as indicated or, when not indicated, conforming to equipment manufacturer's requirements.

2. Reinforce conforming to typical detail unless otherwise indicated.

3. Equipment bases shall include concrete, reinforcing steel, form work as required, and anchor bolts. Place grout for equipment included in the Work.

4. Finish top area of bases between anchor bolts and forms with a troweled finish.

3.09 TESTING:

A. Field Testing of Concrete Plant and Mixing Trucks:

1. The concrete plant shall be inspected and tested to ensure conformance with ACI 304 and the "Concrete Plant Standards of the Concrete Plant Manufacturers Bureau". The scales shall be calibrated at the initial setup and at 3-month intervals thereafter.

2. Mixing trucks shall be inspected and tested to ensure conformance with ACI 304 and "Truck Mixer and Agitator Standards of the Truck Mixer Manufacturers Bureau" of the National Ready-Mix Concrete Association. Tests shall be done at initial setup and every 3 months thereafter.

3. Submit test reports when requested.

B. Field Testing of Concrete and Making of Concrete Test Cylinders:

1. Contractor shall furnish on request test equipment, test cylinder molds, and certified personnel to perform all required field tests, make the required concrete test cylinders, and deliver test cylinders to the testing laboratory. The prescribed tests shall be made in the presence of or with the concurrence of the City.

2. Field testing personnel shall be on-site throughout placement of concrete.

3. Concrete sampling for tests and cylinder making shall be done conforming to ASTM C172 except samples for slump, air and temperature tests shall be taken from the first portion of the batch discharge. Samples shall be taken at random and at the point of truck discharge.

   a. Moisture content, ASTM C566. Perform this test a minimum of twice a day and adjust the amount of mix water to compensate for the moisture content of the aggregates.

   b. Prepare test cylinders conforming to ASTM C31, with not less than one set of cylinders (four cylinders) from each day's placement for each 100 cubic yards or fraction thereof.

   c. Slump test conforming to ASTM C143. Perform tests on the first batch produced each day, for every 50 cubic yards or fraction thereafter, and with every set of test cylinders. Additional tests shall be run when directed by the Engineer.

   d. Air content test conforming to ASTM C231. Perform for first batch of day and with each set of test cylinders.

   e. The batch of concrete being tested for slump or air content shall not be placed until acceptable results are obtained.

   f. Discard concrete used for slump and air tests.

g. Perform concrete and air temperature tests for first batch of day and with each set of test cylinders. Additional readings shall be taken when directed by the Engineer.

h. Any batch of concrete with slump or air content not in conformance with Specifications shall be rejected.

i. Furnish slump, air content, and temperature test results to the testing laboratory for inclusion in the cylinder rest reports.

C. Laboratory Testing of Aggregates and Concrete During Construction:

1. An independent testing laboratory will be selected and paid by the Developer/Owner to perform the required laboratory tests and statistical evaluations of aggregates and concrete being used in the Work.

2. Laboratory will cure and test concrete cylinders conforming to ASTM C192 and C39, testing two cylinders 7 days of age and two at 28 days of age.

3. Contractor shall have the right to observe all phases of concrete cylinder curing and testing. Should Contractor observe any deviations from the prescribed testing procedures that he considers detrimental to concrete strength test results, he shall immediately notify Developer/Owner in writing.

4. Contractor shall assist laboratory in obtaining Samples of fine and coarse aggregate for testing.

5. The Contractor shall make arrangements with the testing laboratory to receive copies of test reports. The cost of providing a maximum of two copies of each report to the Contractor will be paid by the Developer/Owner.

6. Should the test results indicate low strength concrete as defined in PART 3 - Low-Strength Concrete, this Section, Contractor shall take immediate corrective action.

7. Should the statistical data indicate an excessive margin of safety, the concrete mix may be modified subject to Engineer’s approval.

8. Should the material tests taken during construction indicate nonconformance with the Specifications, the Contractor shall take immediately corrective action.

END OF SECTION 03300

SECTION 11151 – SUBMERSIBLE WASTEWATER PUMPING STATION

PART 1 – GENERAL

1.01 SUMMARY:

A. This section covers furnishing and installing submersible wastewater pumping stations and related components.

B. Pumping stations shall be:

1. Capable of pumping raw wastewater and be of the duplex type.

2. Furnished complete and include pump casings, shafts, bearings, seals, lubrication, floor mounted discharge bases, piping assemblies, guide rails, anchor bolts, submersible motors, controls, power cables, access hatch cover and all other parts and accessories indicated, specified or required for proper installation, operation and maintenance.

C. Related Work Specified Elsewhere:

1. Site Preparation and Earthwork: Section 02200.

2. Manholes and Wetwells: Section 02605.

3. Valves, Hydrants and Accessories: Section 02640.

4. Pipe Installation and Testing: Section 02620.

5. Chain-Link Fences and Gates: Section 02831.

6. Concrete: DIVISION 3.

1.02 REFERENCES:

A. Applicable Standards:

1. American National Standards Institute (ANSI).

a. B16.1 - Cast Iron Pipe Flanges and Flanged Fittings.

2. American Iron and Steel Institute (AISI).

3. Anti-Friction Bearing Manufacturer's Association (AFBMA).

4. Hydraulic Institute Standards (HIS).

5. National Electrical Manufacturer's Association (NEMA).

6. Institute of Electrical and Electronics Engineers (IEEE).

1.03 SUBMITTALS:

A. Submit as specified in DIVISION 1.

B. Shop drawings shall be submitted showing materials and assembly of all elements of the pumping station. In addition to pump and motor data to be submitted descriptive literature shall clearly indicate all information necessary to evaluate conformance with specification requirements for all features of the pump station including valves. Complete data for all electrical items, switches, enclosures, relays, motor starters and controls, and a drawing of the control panel layout and a schematic diagram of the control panel circuitry shall be included. Submittals shall include, but not be limited to, the following:

1. Equipment submittals as specified in DIVISION 1.

2. Standard performance curves for each pump model furnished. Curves shall cover range from shutoff to 150% of design flow rate at the conditions specified, and shall be submitted for the following parameters as a function of pump capacity:

a. Total developed head.

b. Required brake horsepower.

c. Pump efficiency.

d. Required wire-to-water horsepower.

e. Minimum nameplate horsepower with 1.15 derating factor (excluding motor S.F.).

f. Required NPSH.

g. Minimum recommended submergence.

C. Report of factory tests.

D. Top slab details including reinforcement and access hatch catalog cuts.

1.04 QUALITY ASSURANCE:

A. Factory Tests and Reports:

1. Perform tests on each pump in accordance with Hydraulic Institute Standards except as otherwise specified.

2. Statically balance pump impellers and dynamically balance all pump/motor units such that equipment vibration displaced (peak-to-peak) as measured at any point on the machine shall not exceed 5.0 mils for 1200 r.p.m. and 4.0 mils for 1800 r.p.m.

3. Submit results of factory tests in accordance with DIVISION 1.

4. Perform standard tests on all motors in accordance with IEEE.

1.05 FACTORY ASSEMBLY:

A. Pump/motor units shall be completely shop assembled and aligned prior to shipping.

B. After completion of the specified factory tests, pumps shall be prepared for shipment with the minimum amount of disassembly, and such that no field disassembly, cleaning, or flushing is required.

C. Any components removed for shipping shall be match-marked prior to removal and shipment.

D. Prepare all cast iron surfaces and provide manufacturer’s standard paint system.

PART 2 - PRODUCTS

2.01 ACCEPTABLE MANUFACTURERS:

A. FLYGT

B. EBARA

C. KSB

D. City approved equal.

2.02 GENERAL REQUIREMENTS:

A. Provide totally sealed submersible electrically operated pumps capable of pumping raw unscreened sewage.

B. Pumps shall be capable of operating dry continuously for at least 24 hours without damage.

C. Pump controls shall be as indicated and as specified in this section.

D. Pump shall operate at or near maximum efficiency at operating conditions.

E. Pump head-capacity curve shall be continuously falling from shutoff head.

F. Pump discharge connection elbow and discharge piping shall be installed such that pump will automatically connect and seal to discharge connection elbow when lowered into place.

G. Pump shall be easily removable for inspection or service.

H. Provide guide rail system and pump rail guide bracket to raise or lower pump unit by lifting chain.

I. Guide entire weight of pump unit with a minimum of two guide bars.

J. Seal interface of the pump and discharge elbow by O-ring, gaskets, or metal to metal contact.

K. Pumps shall be capable of pumping 3-inch diameter non-compressible solids.

L. All equipment to be installed inside the wetwell shall be explosion-proof rated for use in Class I, Division 2, Group C and D areas.

M. Pumping station equipment shall be installed in a concrete wetwell.

2.03 DESIGN REQUIREMENTS: Design requirements will be determined by the Engineer. The following requirements at a minimum shall be established for each pump and provided to the City for review and approval prior to ordering of any equipment. The City shall review all information submitted in a timely manner.

A. Number of Pumps (2 min.)

B. Design Capacity

C. Design Heads:

Minimum, ft.
Rated, ft. (at Design Capacity)
Shutoff, ft. (minimum)

C. Maximum Motor Speed, rpm (not to exceed 1800 rpm)

D. Minimum Efficiency at Rating Point, %

E. Brake horsepower

F. Wire to Water Horsepower

G. Minimum Nameplate Motor Horsepower: Nameplate horsepower, regardless of service factor, shall be at least 115 percent of the maximum load imposed by the driven equipment.

H. Maximum Depth of Water in Wetwell, ft.

I. Minimum Depth of Water in Wetwell, ft.

J. Minimum Discharge Elbow Outlet Size, In.

2.04 MATERIALS AND CONSTRUCTION:

A. Construct motor housing, pump casing, and major pump components of cast iron conforming to ASTM A48.

B. Provide bolts, nuts, and washers of AISI Series 300 stainless steel.

C. Impeller:

1. Cast iron.

2. Non-clog design with two discharge ports.

3. Secured to shaft with pinned fasteners to prevent slipping in either direction.

4. Balanced statically and dynamically to eliminate vibration and minimize hydraulic end thrust.

5. Castings shall not have been repaired by plugging, welding, or other means.

6. Provide renewable stainless-steel or Nitrile coated steel casing wearing ring for efficient sealing between volute and impeller.

D. Shaft:

1. Ample diameter to assure first critical speed will occur at not less than 150% of rated pump speed.

E. Bearings:

1. Minimum B-10 life of 40,000 hours.

2. Pump shaft to rotate on two (upper and lower) permanently lubricated bearings without end movement.

F. Shaft Seal:

1. Two mechanical seals arranged in tandem in an oil bath reservoir shall seal pumped liquid from motor compartment.

3. Moisture detector shall be installed in stator housing and connected to pump controls.

3. Seal faces shall be made of tungsten carbide and carbon.

G. Oil Chamber:

1. Oil chamber shall contain an inspection plug, drain plug and vent plug.

H. Mating Surface Seals:

1. All mating surfaces of major components shall be machined and fitted with O-rings where watertight sealing is required.

2. The use of elliptical O-rings, gaskets, or seals requiring specific fastener torque to obtain and maintain seal compression and watertightness will not be acceptable.

2.05 ACCESSORIES:

A. Pump Discharge Base:

1. Base shall be sufficiently rigid to firmly support the guide rails, discharge piping and pumping unit under all operating conditions.

2. Base shall be provided with integral support legs suitable for bolting to the floor of the wetwell with stainless steel anchor bolts.

3. Designed to automatically connect to the pump discharge without bolts.

4. Constructed of cast or ductile iron.

5. Diameter and drilling of the elbow outlet flange shall conform to ANSI B16.1, Class 125.

B. Rail Guides:

1. Fasten stainless-steel guide supports to pump so that no lifting loads are applied to pump or motor housing.

C. Lifting Cable:

1. Provide one stainless-steel cable for each pump.

2. Design to raise and lower pump with additional safety factor for overcoming force of pump hang-ups.

3. Provide hook for cable when not in use.

4. Provide one portable hoist assembly for removal of pumps:

   a. Hoist shall be electrically operated.

   b. Hoist shall have mounting plate/socket cast into top of concrete slab.

D. Guide Rails:

1. Stainless-steel pipe.

2. All 316 stainless steel, including rails, brackets, and anchor bolts.

3. Size shall be 2-inch minimum.

4. Shall not support any portion of the pump weight.

5. Provide a minimum of two guide rails.

6. Shall extend to the top of the wetwell at the access hatch cover.

E. Cable Holder:

1. Provide grip holders for pump and control cables.

2. Cables shall be easily adjusted to pumping level without splices.

3. Provide continuous cables from control panel to pumps and level controls.

F. Access Hatch Cover:

1. Fabricated aluminum hatch suitable for a live load of 150 pounds per square foot with stainless steel accessories.

2. Spring loaded to minimize opening effort.

3. Automatic latching mechanism shall prevent the hatch from closing unintentionally.

4. Double leaf type construction of structural shapes and reinforced diamond pattern checkered plate.

5. Structural shapes and plates shall have a minimum thickness of 1/4 inch.

6. Hatch Cover shall be set in concrete top. All aluminum surfaces to be in contact with concrete shall be given a heavy coat of coal tar paint.

2.06 ELECTRICAL EQUIPMENT:

A. Conform to NEC, NEMA and IEEE on all electrical equipment and controls.

B. Controls:

1. Wetwell level and alarm controls shall be 120 volt and shall be provided by sealed float type mercury switches. The mercury tube switches shall be hermetically sealed stainless steel capsule surrounded by polyurethane foam and encased in polypropylene for corrosion and shock resistance.

2. The support wire for each float switch shall have a neoprene jacket.

3. The float shall contain an internal weight to hold the switch in place in the wetwell.

4. Each float switch shall hang in the wetwell supported only by the individual cord connected thereto.

4. Three level sensors (normally-open) shall be provided for automatic operation with an electric alternator. The lower control shall be at the turn-off level, the upper control is set at the turn-on level required and the override control is set above the upper control so that both pumps will come on if the level rises above upper control. If one pump fails for any reason, the other pump shall automatically operate on the override control until trouble is corrected. A fourth level sensor (normally-open) shall be used to operate a high level alarm and relay to a telephone dialer in the control panel. Alarm shall be audio and visual. A fifth level sensor (normally–closed) shall be provided and used to operate a low level alarm and turn off any pumps that are running and relay to a telephone dialer in the control panel. Alarm shall also be audio and visual.

C. Provide the electrical control panel, motor starters, and pump controls as indicated on the drawing. Control shall include indicating lights for pump run, moisture detection, overload and thermal trip. All lighted indicators shall be push to test.

D. Prefabricated Exterior Control Panel Design Requirements:

1. NEMA Type 4X enclosure with gasketed hinged door, padlock hasp, screw-type door clamps and padlock.

2. Interior steel mounting panel.

3. Sized to house motor starters, relays, alternator, etc.

4. Mount on unistruct rack that is sized adequate to hold the two disconnect switches and the common control panel.

5. Watertight termination fittings for all pipes and conduits entering enclosure.

6. Interior of box insulated with 1-inch-thick noncombustible Styrofoam board insulation with foil facing.

7. Chromalox 150-watt (minimum) Type S strip heater and a Chromalox WR-90 thermostat wired to power supply terminal block through a 5-A cartridge type fuse.

8. Furnished by pump manufacturer.

9. Panel shall be equipped with a HAND-OFF-AUTO switch for operation.

10. Panel shall be provided with a run time meter for each pump. Meter shall be calibrated in one-hundredth hour increments.

11. An automatic alternator with manual switch shall be provided to change the sequence of operation at the end of each pumping cycle. The manual switch shall allow for either pump to be selected as lead pump or for automatic alternation. Timed alternation will not be acceptable. The alternator shall have a light indicating which pump is in the lead. In the event that either pump is out of service the alternator shall be bypassed.

12. Control panel shall be provided with 120 volt single phase service receptacle.

E. Submersible motors.

1. Each pump shall be driven by an air-cooled, totally submersible, electric motor furnished by the pump manufacturer.

2. Each motor shall be rated 480 volts, 60 Hz, 3-phase.

3. The starter housing shall be an air-filled, watertight casing.

4. Motor insulation shall be moisture resistant, Class F, 155°C and shall be NEMA Design B for continuous duty.

5. Each pump motor shall be provided with a special cable suitable for submersible pump applications.

6. Cable size shall conform to NEC requirements.

7. The cable entry water seal design shall be such that a specific fastener torque is not required to ensure a watertight and submersible seal. The use of epoxies, silicones or other secondary sealing systems will not be acceptable.

8. Three additional pump/motor tags shall be provided for each motor/pump unit. Each set shall have identical information as the corresponding motor/pump set.

F. Alarm System.

1. The alarm system shall be activated in cases of power failure, pump failure, low or high water level, unauthorized entry and all available generator alarms based on the approved make/model of generator (example: low fuel, over-temp, low oil pressure).

2. Alarm system shall activate a red warning light located on the electric service pole, an audible horn, and a telephone dialer. Telephone dialer shall be RACO Chatterbox Model CB or approved equal with a minimum of eight discreet inputs. The red warning light and audible horn shall have separate on/off switches. The horn shall have a sound pressure level of at least 100 dB at ten(10) feet and be housed in a weather proof box. The horn and light shall be provided with battery back-up in the case of a power failure. The alarm system shall be enclosed in a weather-proof housing.

2.07 EMERGENCY OPERATION:

A. All pump stations shall provide overflow protection by means of a riser from the force main with quick connect coupling and appropriate valving to hook up portable pumps.

1. The diameter of the quick connect coupling shall be designated by the City.

2. Riser assembly shall be housed in a concrete vault. Riser assembly shall include a check valve and a plug type shutoff valve.

3. Access to the assembly shall be through an aluminum hatch cover cast into the top slab. Hatch cover shall be provided by the pump manufacturer and meet requirements covered in Section 2.05(F).

4. All valves, piping and fittings shall be field painted. Field painting shall consist of a minimum of two coats of epoxy enamel paint. Color to be selected by the City.

B. Pumping stations designated by the City as temporary shall be provided with a quick couple connection for a portable generator. Quick couple connection type shall be compatible with existing City of Republic equipment.

C. Pump stations not designated temporary by the City shall provide overflow protection by a quick connect coupling and one of the following methods:

1. Connection to two independent public utility sources, or;

2. Provide power generating equipment.

a. Provide low fuel alarm relay to telephone dialer.

b. Provide automatic transfer switch.

c. The telephone dialer shall be engaged upon transfer of power to the standby generator.

d. Provide automatic day/time selection timer to exercise the generator at user’s selectable time.

e. Type of fuel to be determined by the City and on board fuel storage volume shall be sufficient for 24 hours of continuous operation under full load.

2.08 VENTILATION

A. Pump station wetwell shall be provided with adequate ventilation.

B. Ventilation piping shall be provided with 1/4-inch screen mesh.

2.09 STATION GROUNDS

A. Fencing:

1. A chain-link fence shall be provided around the pump station.

2. The fence shall have a fabric height of six feet and be provided with three barbed wire strands above the top of the fabric.

3. The fence shall be provided with a 12-foot wide double-leaf gate with locking system.

B. Valve Vault:

1. A suitable valve vault shall be provided to house a plug valve and check valve from the discharge of each pump. Check valve shall be located between the plug valve and the pump. Valves shall be placed only in horizontal pipe runs. Valves shall not be located in the wetwell.

2. Check valves shall be as specified in other sections of the specification.

3. Plug valves shall be as specified in other sections of this specification.

4. Valve vault shall be constructed of concrete and be provided with an aluminum access hatch cover of similar design and manufacture of the hatch cover provided for the wetwell. Access hatch cover shall be of single leaf design and be a minimum of 30 inches by 30 inches.

5. Provide drain connecting vault to wetwell. Provide a shut off valve in the drain piping between the vault and wetwell. Shut off valve shall be provided with a valve box and extension stem if it is located exterior to the structures.

6. All valves, piping and fittings shall be field painted. Field painting shall consist of a minimum of two coats of epoxy enamel paint. Color to be selected by the City.

C. Gravel Surfacing:

1. Crushed rock: Gradation of 3/4-inch to 1-inch sizes.

2. The area inside the fence shall be provided with a minimum of 4 inches of gravel surfacing on a four mil polyethylene sheeting placed over entire enclosed area. Polyethylene sheeting shall be provided with 3 -one inch holes per square yard.

3. Treat soil with soil sterilant prior to sheeting application.

D. Outside Lighting:

1. An outside weatherproof pole mounted light shall be provided.

2. Light shall be of the high-pressure sodium type with electric eye (photo cell) for dusk to dawn operation.

E. Access Road:

1. Pump station shall be provided with an asphalt access road/drive.

2. Access road shall be 12 feet wide and extend from the pump station gate to the concrete driveway entrance.

3. Access road shall be constructed in accordance with Section 02512 and consist of 4 inches of Type 301 base on 6 inches of rolled stone base.

4. Access road shall have a turn-around provided at the pumping station.

F. Water Supply:

1. Provide metered water supply to pumping station with a 3/4" freeze proof yard hydrant within perimeter fence.

PART 3 - EXECUTION

3.01 INSTALLATION, START-UP, AND TESTING: All Work shall conform to manufacturer's recommendations.

3.02 MANUFACTURER'S FIELD SERVICE: Provide installation, start-up and testing services for all equipment.

3.03 INSTALLATION:

A. Make all electrical and control connections.

B. Provide all necessary lubrication for initial start-up, testing and as required for final acceptance.

C. Provide a complete unit with all materials, components and adjustments as required for successful operation.

D. Installation, start-up and setting of all equipment and associated construction shall conform to manufacturer's recommendations.

E. Do not place grout for pump discharge bases until pumps are completely aligned.

F. Install pipe and pipe appurtenance supports to minimize stresses being placed on pump nozzles.

G. Electrical junction boxes not permitted inside wetwell.

3.04 PERFORMANCE TESTS:

A. Conduct in the presence of Contractor, Engineer and City.

B. Equipment Tests:

1. Check performance of all components as a functioning unit.

2. Check alignment of each unit.

C. Operational Tests:

1. Conduct such operational tests as necessary to determine that the performance of equipment and controls is as specified.
2. Tests will generally consist of placing equipment in operation under varying conditions and observing performance.

D. Make all necessary equipment adjustments and corrective work indicated by tests.

E. Submit a written test report to Contractor with one copy to Engineer in a letter form stating operations performed and results obtained for each unit.

F. Wetwell hydrostatic tests as specified for Manhole Water Testing in the Pipe Installation and Testing Section.

3.05 PAINTING: Prepare surfaces of damaged and uncoated areas and touch-up as required for complete protection.

END OF SECTION 11151

SECTION 11152 - WETWELL MOUNTED WASTEWATER PUMPING STATION

PART 1 - GENERAL

1.01 SUMMARY:

A. This section covers a wetwell mounted duplex pumping station to be furnished and installed complete with all equipment and appurtenances specified or required to provide a complete and satisfactory pumping installation.

B. Pumping stations shall be:

1. Capable pumping raw wastewater.

2. Furnished with all equipment and appurtenances and shall be constructed, assembled and placed in proper operating condition in full conformity with drawings, specifications, engineering data, instructions, and recommendations of the pumping station manufacturer unless exceptions are noted by the Engineer.

C. The principal items of equipment shall include two vertical, close-coupled, motor driven, vacuum primed, non-clog sewage pumps; valves; internal piping; central control panel with circuit breakers; motor starters and automatic pumping level controls; heater; ventilating blower; priming pumps and appurtenances; and all internal wiring.

D. Related Work Specified Elsewhere:

1. Site Preparation and Earthwork: SECTION 02200.

2. Manholes and Wetwells: SECTION 02605.

3. Valves, Hydrants and Accessories: SECTION 02605.

4. Pipe Installation and Testing: SECTION 02620.

5. Chain-Link Fences and Gates: SECTION 02831.

6. Concrete: DIVISION 3.

a. B16.1 - Cast Iron Pipe Flanges and Flanged Fittings.

1.02 REFERENCES:

A. Applicable Standards:

1. American National Standards Institute (ANSI).

2. American Iron and Steel Institute (AISI).

3. Anti-Friction Bearing Manufacturer's Association (AFBMA).

4. Hydraulic Institute Standards (HIS).

5. National Electrical Manufacturer's Association (NEMA).

6. Institute of Electrical and Electronics Engineers (IEEE).

7. American Society for Testing and Materials (ASTM):

a. A48 - Gray Iron Castings.

b. A307 - Specification for Carbon Steel Bolts and Studs.

8. American Water Works Association (AWWA):

a. C151 - Ductile Iron Pipe, Centrifugally Cast for Water or Other Liquids.

b. C110 - Ductile-Iron and Gray-Iron Fittings, 3 in. through 48 in., for Water and Other Liquids.

1.03 SUBMITTALS:

A. Submit as specified in DIVISION 1.

B. Submittals shall include, but not be limited to, the following:

1. Equipment submittals as specified in DIVISION 1.

2. Shop drawings shall be submitted showing materials and assembly of all elements of the pumping station. In addition to pump and motor data to be submitted descriptive literature shall clearly indicate all information necessary to evaluate conformance with specification requirements for all features of the pump station including valves. Complete data for all electrical items, switches, enclosures, relays, motor starters and controls, and a drawing of the control panel layout and a schematic diagram of the control panel circuitry shall be included and permanently laminated to the inside door of the control panel. Information submitted shall include but not limited to the following:

   a. Pump data

      (1) Name of manufacturer

      (2) Type and Model

      (3) Design and Model

      (4) Size of pump suction inlet

      (5) Size of pump discharge

      (6) Type and number of bearings

      (7) Maximum bhp requirement of pump at any total head above specified minimum for continuous operation

      (8) Maximum diameter of test sphere

      (9) Complete performance curves showing capacity, head, NPSH requirements, efficiency and bhp requirements

      (10) Shaft diameter

      (11) Type of pump seal

b. Motor data

(1) Name of manufacturer

(2) Type designation

(3) Rated size of motor (hp), service factor, and temperature rating

(4) Full load rotative speed

(5) Weight

(6) Input-output efficiency at:

(i)Full Load

(ii) Rated Pump Condition

(7) Full load current

(8) Locked rotor current

(9) Shaft diameter

(10) Type of lubricant

(11) Description of special moisture resistant treatment of motor air gap surfaces.

C. Report of factory tests.

D. Top slab details including reinforcement and access opening layout.

1.04 QUALITY ASSURANCE:

A. Factory Tests and Reports: Before shipment from the factory, the pumping station shall be operated to check alignment, faulty equipment and controls, proper wiring, leaks in piping, seals, or welds, and proper operation of the automatic control system and auxiliary equipment. Pump suction and discharge lines shall be connected to a water tank and the sewage pumps operated at least one hour to simulate the field service conditions. The automatic control shall be adjusted to the specified levels.

Defective equipment and materials disclosed by such tests shall be replaced and the station placed in satisfactory operating condition before shipment.

1.05 FACTORY ASSEMBLY:

A. Pump/motor units shall be completely shop assembled and aligned prior to shipping.

B. After completion of the specified factory tests, pumps shall be prepared for shipment with the minimum amount of disassembly, and such that no field disassembly, cleaning, or flushing is required.

C. Any components removed for shipping shall be match-marked prior to removal and shipment.

D. Prepare all cast iron surfaces and provide manufacturer’s standard paint system.

PART 2 - PRODUCTS

2.01 ACCEPTABLE MANUFACTURERS:

A. Smith & Loveless, Inc.

B. City approved equal.

2.02 PUMPING STATION CONSTRUCTION:

A. The pumping station shall be constructed as one complete factory-built assembly.

B. Pumping station shall be sized to rest on the top of the wetwell as detailed on the construction drawings. The supporting floor plate shall be minimum 3/8" thick steel with broken down edges or other reinforcing, as required, to prevent deflection and insure an absolutely rigid support.

C. The pump station shall be enclosed by an insulated fiberglass cover. The cover shall be hinged and have a suitable drip-lip around the edge and shall be provided with a hasp and staple connection to the floor plate to allow the pump chamber to be locked with a padlock. The cover shall have a latch mechanism to keep the cover open under load. Adjustable ventilating louvers shall be provided on each end of the fiberglass cover which are capable of being closed during cold weather operation.

D. A steel manway cover located exterior to the fiberglass pump chamber shall be provided, complete with padlocking provisions. The manway shall be an integral part of the station floor plate and provide access to the wetwell.

2.03 SEWAGE PUMPING EQUIPMENT: The sewage pumping equipment to be furnished and installed shall consist of vertical non-clog sewage pumps, each complete with all specified accessories and appurtenances. Pumps shall be close coupled. All pumps in the station shall be the same type.

2.04 DESIGN REQUIREMENTS: Design requirements will be determined by the Engineer. The following requirements at a minimum shall be established for each pump and provided to the City for review and approval prior to ordering of any equipment. The City shall review all information submitted in a timely manner.

A. Number of Pumps (2 min.)

B. Rated Total Head, ft.

C. Capacity at Rated Head, gpm

D. Normal Operating Head Range, ft

E. Min. Total Head for continuous operation, feet

F. Min. Shutoff Head, feet

G. Max. pump operating speed, rpm (not to exceed 1800)

H. Max. bhp Required at the Motor for any Point in the Operating Head Range

I. Min. Diameter of Test Sphere, inches (3 inch min.)

J. Min. Suction Inlet Diameter, inches

K. Min. Discharge Outlet Diameter, inches

L. Head losses through the pump are not included in the total pumping heads stipulated in the foregoing design data tabulation.

M. Each unit shall be designed so that reverse rotation is either prevented or will not damage any part of the unit.

2.05 MATERIALS AND CONSTRUCTION:

A. Pump Material:

1. Case, Cast iron, ASTM A48

2. Impeller, Cast iron, ASTM A48

3. Shaft, Stainless steel or carbon steel with stainless steel sleeve

4. Mechanical Seal, Durametallic "Dura Seal", double seal, carbon and ceramic with No. 9 or better carbon rings, or equivalent.

B. Close-Coupled Pump Construction:

1. Case:

Such that impeller can be removed without disconnecting piping.

2. Suction and Discharge Flange:

ANSI 125 lb.

3. Impeller:

   One piece enclosed "non-clog" type with two discharge ports, locked to shaft with pinned fastener.

4. Shaft:

   Pump-motor shaft shall be one piece stainless steel construction with shaft extension turned, ground, and polished and provided with tapered end for easy impeller removal.

5. Minimum Shaft Diameter:

   1-7/8 inches through the mechanical seal. This minimum shaft diameter will not apply to pumps having a carbide bearing immediately above the impeller hub as furnished by Baldwin-Lima-Hamilton.

6. Mechanical Seal:

   Lubricated with water from pump discharge, through a filter that screens out all solids larger than 50 microns. Provide a replacement pump shaft seal assembly, a spare volute gasket, and a spare filter cone for each pump.

7. Accessories:

   Gage cock on each suction and discharge nozzle.

C. Balance:

1. All rotating parts shall be accurately machined and in as nearly perfect rotational balance as practicable. Excessive vibration shall be sufficient cause for rejection of the equipment. The mass of the unit and its distribution shall be such that resonance at normal operating speeds is avoided.

2. At any operating speed, the ratio of rotative speed to critical speed of a unit or its components shall be less than 0.8 or more than 1.3.

D. Motors:

1. Motors shall be drip proof, NEMA Design B, not over 60 degrees C rise on continuous duty, with a 1.15 service factor, suitable for 480 volt, 60 Hz, 3 phase power supply.

2. Nameplate horsepower rating shall be equal or be greater than the maximum load imposed by the pump when at any head in excess of minimum head specified for continuous operation.

3. Each motor shall have special moisture resistant insulation and the rotor and stator air gap metal surfaces shall be coated with rust preventive compound.

4. Bearings shall be effectively protected from contamination and dirt. Grease lubricated bearings shall be provided with relief facilities positively preventing over greasing. Oil lubricated bearings shall have idle and running oil level indication. Motor bearings shall be antifriction type with an average life of not less than 10 years. Motors shall have engraved or stamped nameplates and the bearings and lubricant identity permanently marked.

5. Each motor shall be fitted with heavy lifting eyes or lugs designed to support the entire weight of the pump and motor.

E. Shop Tests:

1. Each pump shall be shop tested for capacity, power requirement, and efficiency at specified minimum head for continuous operation, rated head, shutoff head, and at as many other points as necessary for accurate performance curve plotting in each case. All tests shall be made in conformity with the requirements and recommendation of the Hydraulic Institute. Shop tests shall be conducted by the pump manufacturer or by the pumping station manufacturer after installation in the pumping station.

2. Not less than five certified copies of a report covering each test, and capacity, power, and efficiency curves based on shop tests results shall be prepared and delivered to the Engineer not less than 10 days prior to shipment of the equipment from the factory.

F. Responsibility: The manufacturer of the pumping station assembly shall be responsible for proper installation, alignment, and operating conditions of the pumping equipment when placed in service.

2.06. PUMPING STATION ELECTRICAL SYSTEM:

A. General:

The pumping station shall be designed for 3 phase, 3 wire, 480 volt power service. Single phase, 120 volt auxiliary power requirements and 24 volt control power requirements shall be provided for by furnishing suitably sized dry type transformers within the station. All wiring shall conform to the National Electrical Code and shall comply with local regulations and ordinances of the community for which the station is constructed.

B. Cable:

1. Except for continuation of exterior cables, cable and wiring shall be factory installed.

2. On stations where the disconnect means employ more than one breaker, breaker cable lugs shall be sized to fully accommodate both service entrance conductors and branch service conductors.

3. Removal of outer strands of conductors to make up branch connections will not be permitted.

4. Thermoplastic insulated neoprene covered service entrance conductors of the size required shall be provided.

5. All power and control cable installed in the station shall be copper, insulated for 600 volts, 75C, wet and dry locations, Underwriters Laboratories Type RHH for power cable and Type RHH or THW for control cable.

6. All wires and cables shall be identified on both ends with permanent system and referenced on schematics and as-builts.

C. Equipment:

1. All equipment and devices expressly intended as a means of switching, adjusting, or actuating shall be mounted within convenient reach of an attendant.

2. Externally operable circuit breaker type disconnect means shall permit disconnecting all phase conductors in the station from service entrance conductors.

3. Control and switching equipment enclosures shall be NEMA Type 4X finished steel of rigid heavy-duty construction. Enclosures housing an assembly of switches, contractors, relays, starters, etc., shall have hinged doors with latches.

4. Each pump and motor and auxiliary circuit shall be provided with thermal-magnetic circuit breakers. Breakers for 3 phase loads shall be 3 pole. All breakers shall be operable from outside the control panel.

5. A three position selector switch with HAND-OFF-AUTO position shall be flush mounted on the panel door for operation of each pump motor.

6. Auxiliary and control power may be supplied through a circuit breaker load center.

7. All equipment shall be identified by nameplates and device identifications in agreement with wiring diagrams.

8. Panel shall be provided with a run time meter for each pump. Meter shall be calibrated in one-hundredth hour increments.

D. Panel Wiring:

1. All control wiring in switching and control assemblies shall be color coded or numbered. Color coding shall be such that electrically common interconnections of devices are the same color. The colors may be used more than once but not in the same circuit or cable grouping. Color of plug-in cord conductors does not need to comply with the color code.

2. The power and control enclosure shall contain ground lugs or an AWG ground in the service entrance circuit and each ground cable to devices in the station.

3. The enclosure shall be well grounded to the station shell by mounting or by an AWG bond jumper. Control panel shall be provided with a 120 volt service receptacle.

E. Controls:

1. Wetwell level and alarm controls shall be 120 volt and shall be provided by sealed float type mercury switches. The mercury tube switches shall be a hermetically sealed stainless steel capsule surrounded by polyurethane foam and encased in polypropylene for corrosion and shock resistance.

2. The support wire for each float switch shall have a neoprene jacket.

3. A weight shall be attached to each support cord above the float to hold the switch in place in the wetwell. Weight shall be above the float to effectively prevent sharp bends in the cord when the float operates.

4. Each float shall contain an internal weight to hold the switch in place in the wetwell. Each float switch shall hang in the wetwell supported only by the individual cord connected thereto.

5. Three level sensors (normally-open) shall be provided for automatic operation with an electric alternator. The lower control shall be at the turn-off level, the upper control is set at the turn-on level required and the override control is set above the upper control so that both pumps will come on if the level rises above upper control. If one pump fails for any reason, the other pump shall automatically operate on the override control until trouble is corrected. A fourth level sensor (normally-open) shall be used to operate a high level alarm and relay to a telephone dialer in the operations building. A fifth level sensor (normally-closed) shall be provided and used to operate a low level alarm and turn off any pumps that are running and relay to a telephone dialer in the control panel. Alarm shall be audio and visual.

6. An automatic alternator with manual switch shall be provided to change the sequence of operation at the end of each pumping cycle. The manual switch shall allow for either pump to be selected as lead pump or for automatic alternation. Timed alternation will not be acceptable. The alternator shall have a light indicating which pump is in the lead.

F. Wiring Diagram: The manufacturer shall provide both connection diagrams and schematics, identifying all items in wiring connections in accordance with terminal identification of equipment.

2.07. ALARM SYSTEM:

A. The alarm system shall be activated in case of power failure, pump failure, low or high water level, unauthorized entry and all available generator alarms based on the approved make/model of generator (example: low fuel, over-temp, low oil pressure).

B. Alarm system shall activate a red warning light located on the electric service pole, an audible horn and a telephone dialer. Telephone dialer shall be RACO "Chatterbox". The red warning light and audible horn shall have separate on/off switches. The horn shall have a sound pressure level of at least 100 dB at ten (10) feet and be housed in a weather proof box. The horn and light shall be provided with battery back-up in case of power failure. The alarm system shall be enclosed in a weather-proof housing.

2.08. PIPING:

A. Except where otherwise shown, all sewage piping shall be cast iron. Cast iron pipe shall be ANSI Class 51 conforming to AWWA C151, with C110 fittings.

B. Mechanical joints shall conform to AWWA C111 and flanges shall be Class 125, AWWA C110.

C. All pipe and fittings shall be coated inside and out with manufacturer's standard bituminous coating.

D. Flange bolts and nuts shall be ASTM A307, Grade B, of such length that, after installation, bolts will project 1/8 to 3/8 inch beyond the outer face of the nut.

E. Flange gaskets shall be of ring type made from 1/16 inch thick red rubber or other approved material.

F. Flanged or mechanical joint pipe and fittings shall be used inside the pumping station, and mechanical joint type bells shall be provided outside the station walls as shown on the drawings.

2.09 VALVES:

A. Each pump discharge shall be provided with an eccentric plug valve and a spring loaded check valve. Valves shall be as specified in the Valves, Hydrants and Accessories Section.

2.10. VENTILATING BLOWER AND HEATER:

A. A ventilating blower shall be provided, capable of delivering 250 cfm at 0.1 inch static water pressure, in order to remove the heat generated by continuous motor operation. The ventilating blower shall be turned on and off automatically by a pre-set thermostat. The ventilating blower shall be rigidly mounted from the station floor. The discharge outlet shall have a thick resilient gasket which will match with a louvered opening in the fiberglass cover to seal the discharge to the cover when the cover is closed. A 500 watt electric heater controlled by a pre-set thermostat shall be furnished. The heater shall be rigidly mounted in the station to prevent removal.

2.11. VACUUM PRIMING SYSTEM:

A. A separate and independent priming system shall be furnished for each sewage pump, providing complete standby operation. Each priming system shall include a separate vacuum pump. Vacuum pumps shall have corrosion resistant internal components. They shall each be capable of priming the sewage pump and suction piping in less than 60 seconds under rated static suction lift conditions of 20 feet at mean sea level.

B. Each priming system shall be complete with vacuum pump, vacuum control solenoid valve, prime level sensing probe, and a float operated check valve installed in the system ahead of the vacuum pump to prevent liquid from entering the vacuum pump. The float-operated check valve shall have a transparent body for visual inspection of the liquid level and shall be automatically drained when the vacuum pump shuts off.

C. The priming system shall automatically provide positive lubrication of the mechanical seal each time the sewage pump is primed. To prevent excessive stoppage due to grease accumulation, no passageway in the priming system through which sewage must pass shall be smaller than the equivalent of a 2-1/2" opening.

2.12 EMERGENCY OPERATION:

A. All pump stations shall provide overflow protection by means of a riser from the force main with quick connect coupling and appropriate valving to hook up portable pumps.

1. The diameter of the quick connect coupling shall be designated by the City.

2. Riser assembly shall be housed in a concrete vault. Riser assembly shall include a check valve and a plug type shutoff valve.

3. Access to the assembly shall be through an aluminum hatch cover cast into the top slab. Hatch cover shall be provided by the pump manufacturer and meet requirements covered in Section 11151, paragraph 2.05(F).

B. Pumping stations designated by the City as temporary shall be provided with a quick couple connection for a portable generator. Quick couple connection type shall be compatible with existing City of Republic equipment.

C. Pump stations not designated temporary by the City shall provide overflow protection by a quick connect coupling and one of the following methods:

1. Connection to two independent public utility sources, or;

2. Provide power generating equipment.

a. Provide low fuel alarm relay to telephone dialer.

b. Provide automatic transfer switch.

c. The telephone dialer shall be engaged upon transfer of power to the standby generator.

d. Provide automatic day/time selectable timer to exercise the generator at user's selectable times.

e. Type of fuel to be determined by the City and on board storage volume shall be sufficient for 24 hours of continuous operation under full load.

2.13 STATION GROUNDS:

A. Fencing:

1. A chain-link fence shall be provided around the pump station.

2. The fence shall have a fabric height of six feet and be provided with three barbed wire strands above the top of the fabric.

3. The fence shall be provided with a 12-foot wide double-leaf gate with locking system.

B. Gravel Surfacing:

1. Crushed rock: Gradation of 3/4-inch to 1-inch sizes.

2. The area inside the fence shall be provided with a minimum of 4 inches of gravel surfacing on a four mil polyethylene sheeting placed over entire enclosed area. Polyethylene sheeting shall be provided with 3 -one inch holes per square yard.

3. Treat soil with soil sterilant prior to sheeting application.

C. Outside Lighting:

1. An outside weatherproof pole mounted light shall be provided.

2. Light shall be of the high-pressure sodium type with electric eye (photo cell) for dusk to dawn operation.

D. Access Road:

1. Pump station shall be provided with an asphalt access road/drive.

2. Access road shall be 12 feet wide and extend from the pump station gate to the concrete driveway entrance.

3. Access road shall be constructed in accordance with Section 02512 and consist of 4 inches of Type 301 base on 6 inches of rolled stone base.

4. Access road shall have a turn-around provided at the pumping station.

E. Water Supply:

1. Provide metered water supply to pumping station with a 3/4" freeze proof yard hydrant within perimeter fence.

PART 3 - EXECUTION

3.01 INSTALLATION, START-UP, AND TESTING: All Work shall conform to manufacturer's recommendations.

3.02 MANUFACTURER'S FIELD SERVICE: Provide installation, start-up and testing services for all equipment.

3.03 INSTALLATION:

A. Make all electrical and control connections.

B. Provide all necessary lubrication for initial start-up, testing and as required for final acceptance.

C. Provide a complete unit with all materials, components and adjustments as required for successful operation.

D. Installation, start-up and setting of all equipment and associated construction shall conform to manufacturer's recommendations.

E. Electrical junction boxes not permitted inside wetwell.

3.04 PERFORMANCE TESTS:

A. Conduct in the presence of Contractor, Engineer and City.

B. Equipment Tests:

1. Check performance of all components as a functioning unit.

2. Check alignment of each unit.

C. Operational Tests:

1. Conduct such operational tests as necessary to determine that the performance of equipment and controls is as specified.

2. Tests will generally consist of placing equipment in operation under varying conditions and observing performance.

E. Make all necessary equipment adjustments and corrective work indicated by tests.

F. Submit a written test report to Contractor with one copy to Engineer in a letter form stating operations performed and results obtained for each unit.

G. Wetwell hydrostatic tests as specified for Manhole Water Testing in the Pipe Installation and Testing Section.

3.05 PAINTING AND CORROSION PROTECTION:

A. Preparation of surfaces to be painted and all painting shall be done in the shop before shipment of the station assembly so that field painting will be limited to coating joints or areas not previously painted, or damaged or abraded areas.

B. All pumps, motors, the control cabinet, and controls, and other machines or equipment shall be painted in the shop using epoxy coating or machinery enamel.

C. All painted surfaces damaged during shipment or installation shall be repainted using the same of equivalent materials as used in the original application.

D. All field welded joints, together with all edge and joint surfaces of plates and structural members not previously painted and surfaces from which damaged paint has been removed, shall be prepared for painting by sandblasting or high speed wire brushing or other effective mechanical means. All such surfaces shall then be painted with the same or equivalent materials as used in the original application.

END OF SECTION 11152

SECTION 12000 – RIGHT-OF-WAY TECHNICAL SPECIFICATIONS

NOTE: Standard drawings for pavement repair are available at no cost from the Public Works Department, City of Republic.

PART 1 – GENERAL REQUIREMENTS

1.01 SUMMARY OF WORK:

A. Work Covered by These Specifications:

The work covered by these specifications shall consist of any and all utility work performed or to be performed in, under, or through rights-of-way, streets, or alleys owned by the City of Republic, including but not limited to water supply, sanitary sewer, storm sewer, telephone, fiber optic cable, gas pipelines, electrical conduit or conductors, cable television lines, and telecommunication facilities. It is to include repair of street cuts, required final grading, clean up, disposal of surplus materials and seeding or sodding.

B. Work Sequence:

The PERMIT HOLDER, or his CONTRACTOR shall schedule his work to allow emergency vehicle access to public and private property at all times. Private drives and public streets and alleys shall be opened for use at the end of each workday.

1. PERMIT HOLDER Use of Premises:

The PERMIT HOLDER shall confine construction equipment, storage of materials and equipment, and operations or workers to areas within the public right-of-way and easements of record as indicated on the drawings or as directed by the ENGINEER. If PERMIT HOLDER proposes to use any private property for his use, he shall be solely responsible for making arrangements for such use with the property owner. The CITY shall not be liable for any damages caused by PERMIT Holder’s use of such property.

1.02 EXISTING ABOVE GROUND AND UNDERGROUND INSTALLATION AND STRUCTURES:

A. General:

Utility poles, pipe lines and other existing above ground and underground installations and structures in the vicinity of the Work are to be indicated on the plans according to the best information available to the PERMIT HOLDER, CITY and ENGINEER.

PERMIT HOLDER shall make every effort to protect such installations and structures. He shall contact the OWNERS of such installations and structures and prospect in advance of trench excavation. Any delays or extra cost to the PERMIT HOLDER caused by such installations and structures, whether shown on the plans or not, or found on locations different than those indicted, shall not constitute a claim against the CITY for extra work, additional payment or damages.

Damage to existing above ground and underground installation or structures caused by the PERMIT HOLDER shall be repaired by the PERMIT HOLDER as directed by the OWNER of such installation or structure. The OWNER of such installation or structure shall be notified immediately of any such damage and repairs made as soon as possible to keep the interruption of service to a minimum. The PERMIT HOLDER shall bear any costs assessed because of such repairs and shall hold the CITY and ENGINEER harmless.

1.03 TRAFFIC CONTROL AND SAFETY:

A. Maintenance of Traffic:

The PERMIT HOLDER shall conduct his work as to interfere as little as possible with public travel, whether vehicular or pedestrian. Whenever it is necessary to cross, obstruct, or close roads, driveways and walks, whether public or private, the PERMIT HOLDER shall at his own expense provide and maintain suitable and safe bridges, detours or other temporary expedients for the accommodations of public and private travel, and shall give reasonable notice to the OWNERS of private drives before interfering with them. Prior to interfering with the public travel in any way, the PERMIT HOLDER shall notify the Public Works Department with information as to the extent of the interference and the length of time of such interference.

B. Barricades and Lights:

All streets, roads, highways and other public thoroughfares, which are closed to traffic, shall be protected by means of effective barricades on which shall be placed acceptable warning signs. Barricades shall be located at the nearest intersecting public highway or street on each side of the blocked sections.

All open trenches and other excavations shall be provided with suitable barriers, signs and lights to the extent that adequate protection is provided to the public. Obstructions, such as material piles and equipment, shall be provided with similar warning signs and lights. All barricades and obstructions shall be illuminated by means of warning lights at night. All lights used for this purpose shall be kept burning from sunset to sunrise. Materials stored upon or alongside public streets shall be so placed, and the work at all times shall be so conducted, as to cause the minimum obstructions and inconvenience to the traveling public.

All barricades, signs, lights and other protective devices shall be installed and maintained in conformity with the Manual of Uniform Traffic Control Devices and applicable statutory requirements, and where within highway rights-of-way, as required by the authority having jurisdiction there over.

1.04 SHOP DRAWINGS:

Shop drawings or manufacturer's literature shall be required for water distribution systems for the following items: Pipe and fittings, valves, and fire hydrant assemblies if not purchased from City of Republic. Material certification may be required on all other materials used in the installation of Work in the City's rights-of-way.

1.05 BACKFILL:

There is no ordinary backfill in work performed in the City right-of-way. All backfill will be 90% or 95% compacted as required by the specifications.

PART 2 – EXCAVATION, TRENCHING, AND BACKFILL

2.01 GENERAL:

A. This specification covers excavation and trenching and backfilling work and shall include the necessary clearing, grubbing and preparation of the site, removal of improvements; removal and disposal of all debris; excavation and trenching as required; the handling, storage, transportation and disposal of all excavated material; all necessary sheeting, shoring, and protection work; preparation of subgrades; pumping and dewatering as necessary or required; protection of adjacent property; backfilling; pipe embedment; surfacing and grading; and other appurtenant work.

B. Excavation, trenching and backfilling work shall be performed in a safe and proper manner, with suitable precautions being taken against hazards of every kind. Excavation shall provide adequate working space and clearance for the work to be performed therein.

C. No backfill, fill or embankment materials shall be installed on frozen surfaces, nor shall frozen materials, snow or ice be placed in any backfill, fill, or embankments.

2.02 CLASSIFICATION OF EXCAVATED MATERIALS:

No classification of excavated materials will be made. Excavation and trenching work shall include the removal and subsequent handling of all materials excavated or otherwise removed in performance of the contract work, regardless of the type, character, composition, or condition thereof.

2.03 REMOVAL OF WATER:

A. The PERMIT HOLDER shall provide and maintain adequate dewatering equipment to remove and dispose of all surface and ground water entering excavations, trenches, or other parts of the work. Each excavation shall be kept dry during subgrade preparation and continually thereafter until the pipeline to be installed therein is completed to the extent that no damage from hydrostatic pressure, flotation, or other causes will result.

B. Surface water shall be diverted or otherwise prevented from entering excavated areas or trenches, to the greatest extent practicable without causing damage to adjacent property.

2.04 SHEETING AND SHORING:

Except where banks are cut back on a stable slope, excavation for structures and trenches shall be properly and substantially sheet braced, and shored, as necessary, to prevent caving or sliding, to provide protection for workmen and the Work, and to provide protection for existing structures and facilities. Sheeting, bracing, and shoring shall be designed and built to withstand all loads that might be caused by earth movement or pressure, and shall be rigid, maintaining its shape and position under all circumstances.

2.05 STABILIZATION:

A. Trench bottoms shall be firm, dense, and thoroughly compacted and consolidated; shall be free from mud and muck; and shall be sufficiently stable to remain firm and intact under the feet of the workmen.

B. Trench bottoms, which are otherwise solid, shall be reinforced with one or more layers of crushed stone embedded therein. Not more than ½ inch depth of mud or muck shall be allowed to remain on stabilized trench bottoms when the pipe bedding material is placed thereon.

C. All stabilization work hereunder shall be performed by and at the expense of the PERMIT HOLDER.

2.06 TRENCH EXCAVATION:

A. Except where *knifing*, boring or tunneling is shown on the plans, is specified, or is permitted by the ENGINEER, all trench excavation shall be open cut from the surface.

B. The PERMIT HOLDER shall not open more trench in advance of pipe laying than is necessary to expedite the Work. In the event that pipe laying is stopped for any cause, 100 feet shall be the maximum length of open trench permitted on any line under construction.

2.07 ALIGNMENT AND GRADE:

A. Alignment and Grade-Water Mains:

The alignment and grade or elevation of each pipe line at highway and railroad crossing and other critical points shall be fixed as determined by means of offset stakes to be set by the PERMIT HOLDER. At other locations, line stakes will be furnished and set by PERMIT HOLDER. Pipe is to be laid with 3.5 feet minimum cover with straight sections laid in a straight alignment and curved sections laid at an approximate uniform rate of curvature. Vertical and horizontal alignment of pipes, and the maximum joint deflection used in connection therewith, shall be in conformity with the requirements of the specification covering the installation of the pipe being laid in each case.

B. Alignment and Grade-Sewer:

1. Pipe shall be laid true to line and grade as shown on drawings prepared by licensed ENGINEER. Each section of pipe shall rest upon the pipe bed for the full length of the barrel with recesses excavated to accommodate bell joints. Any pipe that has its grade alignment or joint disturbed after laying shall be taken up and re-laid. Under no circumstances shall pipe be laid in water or when weather or trench conditions are unsuitable for such work in the opinion of the ENGINEER.

2. Sewer mains shall be laid on a uniform grade, and at a uniform (straight) alignment between manholes. All changes in grade, and or alignment, shall be made only at a manhole.

3. Sewer service laterals shall be laid at uniform grade and alignment. Clean-outs shall be provided at any change in grade or alignment of over 45° angle. No change in grade or alignment shall be permitted in that portion of a service lateral passing under a City street.

C. Alignment and Grade-Natural Gas Pipelines:

1. Natural gas pipelines laid in the City rights-of-way shall be laid in a straight alignment parallel or perpendicular to the street centerline to the extent possible. Natural gas transmission lines shall be placed at depths specified by DOT/MPSC Part 192.

2. Non-metallic lines shall be buried with metallic locator wires or tape, which will permit accurate location of said lines from the surface with normal magnetic locator devices.

3. Any line passing under a City street shall be buried at a minimum of 36″ below the street surface and 24″ below flow line of storm drains.

D. Alignment and Grade-Telecommunications Lines:

1. Telecommunication lines buried in the City right-of-way shall be laid in a straight alignment parallel to, or perpendicular to, the street centerline to the extent possible. Local service lines shall be buried a minimum of 24″. Trunk lines and fiber optic lines shall be buried at a minimum depth of 36″. Any line passing under a City street shall be buried at a minimum of 36″ below the street surface. Placement must be a minimum of 24″ below flow line of stormwater structure and natural flow line.

E. Alignment and Grade-Underground Electric Transmission Lines:

1. Electric transmission lines buried in the City rights-of-way shall be laid in a straight alignment parallel to, or perpendicular to, the street centerline to the extent possible. Electric transmission lines shall be buried at a minimum depth of 36″.

2.08 TRENCH WIDTHS AND PIPE CLEARANCES:

A. Trenches shall be excavated to a width, which will provide adequate working space and pipe clearances for proper pipe installation, jointing and embedment. However, the maximum trench bottom width shall be nominal inside pipe diameter plus 24″.

B. Minimum trench widths shall be such as to give a minimum of 6″ clearance between trench walls and exterior of pipe for water and sewer mains. Minimum trench width for natural gas pipelines, conduit for electrical and telecommunication cables, and fiber optic lines shall be as specified by the ENGINEER of record for the utility installing such facilities.

C. The stipulated minimum clearances are not minimum average clearances, but are minimum clear distances which will be permitted between the pipe as laid and any part, projection or point of rock, shale, stone or boulder.

D. Where, for any reason, the width of the lower portion of the trench as excavated at any point exceeds the maximum permitted, either pipe of adequate strength, special pipe embedment, as required by loading conditions and as determined by the ENGINEER, shall be furnished and installed by and at the expense of the PERMIT HOLDER.

2.09 MECHANICAL EXCAVATION:

Mechanical equipment used for trench excavation shall be of a type, design, and construction, and shall be so operated, that the rough trench excavation bottom elevation can be controlled, that uniform trench widths and vertical side walls are obtained at least from an elevation one foot above the top of the installed pipe to the bottom of the trench, and that the trench alignment is such that the pipe when accurately laid to specified alignment will be centered in the trench with adequate clearance between the pipe and side walls of the trench. Undercutting of the trench sidewall to obtain clearance will not be permitted.

2.10 SUBGRADE PREPARATION:

A. Except where otherwise required, pipe trenches shall be excavated below pipe subgrade elevations, as required, to provide for the installation of granular fill pipe foundation material.

B. Whenever required by soft foundations, the PERMIT HOLDER shall excavate to such depth below grade as necessary and the trench bottom shall be brought to grade with granular fill.

C. Bell Holes shall provide adequate clearance for the tools and methods used in installing the pipe. No part of any bell or coupling shall be in contact with the trench bottom, trench walls or granular fill when the pipe is jointed.

2.11 PIPE EMBEDMENT:

A. Granular fill material shall be used as shown on the detail plans. Granular fill may be crushed rock or gravel, and shall meet the requirements for Type 2 Aggregate for Base, Gradation B, Missouri Standard Specifications for Highway Construction. For water mains the granular fill shall be placed under and around the pipe up 12″ above top of pipe. For sewer lines granular fill shall be placed under and around the pipe up to an elevation at least 12 inches above the barrel of the pipe. Natural gas lines may be directly bedded, without granular fill, if so directed by the ENGINEER of record for the installing natural gas utility. Granular fill material shall be placed in a manner as to provide uniform and continuous support and shall not disturb alignment of the pipe during placement.

B. Succeeding layers of backfill above those described shall be placed as described in the following paragraphs.

2.12 BACKFILL:

A. Ordinary Backfill:

There shall be no ordinary backfill in this Work.

B. Compacted Backfill:

1. 90% compaction will be required where the line passes under lawns, pasture, and within the street right-of-way.

2. The average density of the trench backfill shall be 90% of maximum density. Material shall be placed in lifts as required for adequate compaction with variations in lift thickness depending on soil and on method of compaction. Completed backfill shall have no less than 90% density, excluding the top few inches to be used as seedbed or for bedding sod.

3. Compaction may be by hand tamping, tamping machine, or other methods approved by the ENGINEER. PERMIT HOLDER will prepare test pits for sampling and testing and evaluation of compaction procedures.

C. 95% Compacted Backfill:

1. 95% compaction will typically be required under streets, driveways, and walkways. Flowable fill may be used instead of compacted backfill.

2. Placement of material and compaction for 95% compacted backfill shall be as described above for 90% compacted backfill except a minimum of 95% of maximum density must be maintained throughout the backfill.

D. Standard Compaction and Field Density Tests:

1. Wherever the terms "_% of Maximum Density" or "Optimum Moisture" are used, Maximum Density and Optimum Moisture shall be determined by the Standard Compaction Test as defined by ASTM D698.

2. Field Density Test: Field density shall be obtained using the sand cone method (ASTM D1556), by the balloon method (ASTM D2167), or nuclear density gauge (ASTM D2922). The calculated density obtained in this test is divided by the Maximum Density as determined by the Standard Compaction Test to determine the percent compaction obtained.

E. Responsibility of PERMIT HOLDER for Backfill Settlement:

1. Where 90% and 95% compaction is called for, the PERMIT HOLDER shall be responsible financially, and otherwise, for a period of one year after completion of work, for (a) all settlement of trench and other backfill which may occur from time of original backfilling, (b) the refilling and repair of all backfill settlement and the repair or replacement to the original or a better condition of all pavement, top surfacing, driveways, walks, surface structures, utilities, drainage facilities, and sod which have been damaged as a result of backfill settlement or which have been removed or destroyed in connection with backfill replacement operations, and (c) all damage claims or court actions against the CITY for any damage directly or indirectly caused by backfill settlement.

2. The PERMIT HOLDER shall make, or cause to be made, all necessary backfill replacements, and repairs or replacements appurtenant thereto, within thirty days after due notification by the ENGINEER or CITY.

2.13 DRAINAGE MAINTENANCE:

Trenches across roadways or driveways adjacent to drainage ditches of water courses shall not be backfilled prior to the completion of backfilling of the trench on the upstream side of the roadway to prevent the impounding of water after the pipe has been laid. Bridges and other temporary structures required to maintain traffic across such unfilled trenches shall be constructed and maintained by the PERMIT HOLDER. Backfilling shall be done so that water will not accumulate in unfilled or partially filled trenches. All material deposited in roadway ditches or other water courses crossed by the line of trench shall be removed immediately after backfilling is completed and the section grades and contours of ditches or water courses shall be restored to their original condition. Surface drainage shall not be obstructed longer than necessary.

2.14 DISPOSAL OF EXCESS EXCAVATED MATERIAL:

A. All excess excavated materials shall be disposed of away from the site of the Work. The PERMIT HOLDER shall be responsible for locating areas for disposal of such materials.

B. Excavated rock in excess of the amount permitted to be and actually installed in trench backfill, junk, and debris encountered in excavation work, and other similar waste material shall be disposed of away from the site of the Work.

PART 3 – RESTORATION OF SURFACE

3.01 GENERAL:

The PERMIT HOLDER shall restore all surfaces equal to or better than its original condition unless otherwise specified. Restoration includes pavement, sidewalks, alleys, lawns, etc.

3.02 SEEDING, FERTILIZING AND MULCHING:

A. Seeding and fertilizing is required where any utility excavation crosses established lawns, pastureland or right-of-way of the City or in other areas regularly grassed and mowed.

B. After shaping and dressing of areas to be seeded have been completed, a commercial fertilizer, Grade 10-10-10, shall be applied at a rate of not less than 1000 pounds per acre. The area shall be prepared to receive the seed mixture by using a disc spiker or other suitable implement. Seed shall then be spread at the specified rate by drill, by hand seeder, by brillion seeder, or by other approved seeders. Seeding shall not be done during windy weather, or when the ground is frozen, muddy or otherwise in a non-tillable condition.

C. An established grass cover shall be provided on all areas requiring seeding. Irrigation, mulching, mowing and any other operation necessary to provide an acceptable grass cover shall be provided by the PERMIT HOLDER at no additional cost to the CITY.

D. Seed shall be applied at the rate of 80 pounds per acre. The seed shall be composed of a mixture of 40% blue grass, 40% creeping fescue, and 20% perennial rye grass. Seeded areas shall be mulched with straw at a rate of 1.5 tons per acre.

E. The PERMIT HOLDER, at his option and at no additional cost to the CITY, may provide sod as specified herein in lieu of seeding in any or all areas required to be seeded.

STREET, DRIVEWAY, ALLEY AND SIDEWALK REPAIRS:

A. Crushed Stone Surface:

Six inches of compacted stone base meeting Missouri Standard Specifications for Highway Construction, Section 1007.1, Type 1 Aggregate, is to be placed over cut portion of street or alley.

B. Concrete, Asphaltic Concrete and Other Asphaltic Surfaces:

1. All materials used shall conform to City of Republic specifications for such use.

2. All pavement is to be saw cut prior to removal. Repairs to streets, driveways, and alleys disturbed by Work in City rights-of-way are to be made as follows:

   a. New pavement shall have a width of at least 12″ greater than the trench width. Each repair area in concrete or asphalt streets shall be first cut on each side for the full depth with a concrete saw. The material shall be removed so that no damage occurs to the surrounding pavement. If any damage occurs to the surrounding pavement, then the damaged areas will be removed.

   b. For concrete pavements, the concrete thickness of the repair shall be at least 8″. Reinforcement shall be placed with #4 bars at 12″ o.c., transverse and a minimum of three #4 bars longitudinal. Concrete used for repair shall meet Missouri Standard Specifications for Highway Construction for Pavement Concrete (501.2.2), and shall have a minimum cement content of 6.5 bags per cubic yard, a maximum slump of 2 ½ inches, and a minimum compressive strength of 4000 psi at 28 days.

   c. For full depth asphaltic concrete pavements, the asphalt thickness of the repair shall be at least 4″ or equal to thickness of existing pavement. Replace the pavement with hot-mix asphalt and compact thoroughly in lifts not to exceed 4 inches each. Hot-mix asphalt shall be of a commercial mix design equivalent to Missouri Standard Specification Type I-C (403.3).

   d. For other asphalt surfaces, the thickness shall be at least 10″, consisting of 6″ of rolled stone base (MoDOT Type I, or Type 3), compacted to 100% of Maximum Dry Density, and 4″ of thoroughly compacted bituminous surfacing layer consisting of an approved commercial asphalt-aggregate mixture (Cold-mix).

e. The top of all pavement repairs shall be flush with the existing pavement.

f. Curbs and gutters to be replaced as required to match existing. Curbs and gutters are to be constructed of Pavement Concrete (6.5 bag mix).

C. Sidewalks

Sidewalks shall be replaced over the entire width and to the nearest joints. The concrete thickness shall be at least 4″ placed over a 4″ thick rolled stone base. Concrete used for sidewalk repair shall be equivalent to MoDOT Class B concrete, and shall have a minimum cement content of 6 bags per cubic yard, and a maximum slump of 4″.

PART 4 - SEPARATION OF WATER MAINS, SANITARY SEWERS AND STORM SEWERS

4.01 PARALLEL INSTALLATION:

Water mains shall be laid at least 10 feet horizontally from any existing or proposed sewer. The distance shall be measured edge to edge.

4.02 CROSSINGS:

Water mains crossing sewers shall be laid to provide a minimum vertical clear distance of 18″ between the outside of the water main and the outside of the sewer. This shall be the case where the water main is either above or below the sewer. At crossings, the full length of water pipe shall be located so both joints will be as far from the sewer as possible.

4.03 EXCEPTION:

The Missouri Department of Natural Resources must specifically approve any variance from the requirements of Section 4.01 A and/or B, when it is impossible to obtain the specified separation distances. The ENGINEER shall request any such variance after all other remedies have been evaluated.

4.04 SEWER MANHOLES:

No waterline shall be located closer than 10 feet to any part of a sewer manhole.

PART 5 - INSURANCE REQUIREMENTS FOR STANDARD CONTRACTS FOR PROJECTS **UNDER $500,000 OR 180 DAYS IN LENGTH**:

5.01 WORKER'S COMPENSATION:

The coverage must include Employer's Liability with a minimum limit of $1,000,000 for each accident and cover all employees meeting Statutory Limits in compliance with the applicable state and federal laws.

5.02 COMPREHENSIVE GENERAL LIABILITY:

Coverage shall have minimum limits of $1,000,000 per Occurrence, Combined Single Limit for Bodily Injury and Property Damage Liability. This shall include: Premises and Operations, Independent Contractors, Products and Completed Operations, Broad Form Property Damage and XCU Coverage, and a Contractual Liability Endorsement.

5.03 BUSINESS AUTO LIABILITY:

Coverage shall have minimum limits of $1,000,000 per Occurrence, Combined Single Limit for Bodily Injury and Property Damage Liability, including Owned, Hired, and Non-owned Vehicles and Employee Non-ownership.

5.04 SPECIAL REQUIREMENTS:

A. The City of Republic is to be included as an Additional Insured on the Comprehensive General, Business Auto Liability and Builder's Risk Policies.

B. An appropriate Hold Harmless Clause shall be included.

C. Current, Valid insurance policies meeting the requirements herein identified shall be maintained during the duration of the named project. Renewal certificates or cancellation notices shall be sent to the CITY 30 days prior to any expiration date.

D. It shall be the responsibility of the contractor to ensure that all subcontractors comply with the same insurance requirements that he is required to meet.

E. Certificates of insurance meeting the required insurance provisions shall be forwarded to the Public Work's Administrative Office.

END OF SECTION 12000